

cranelistings.com

cranelistings.com























[illegible]

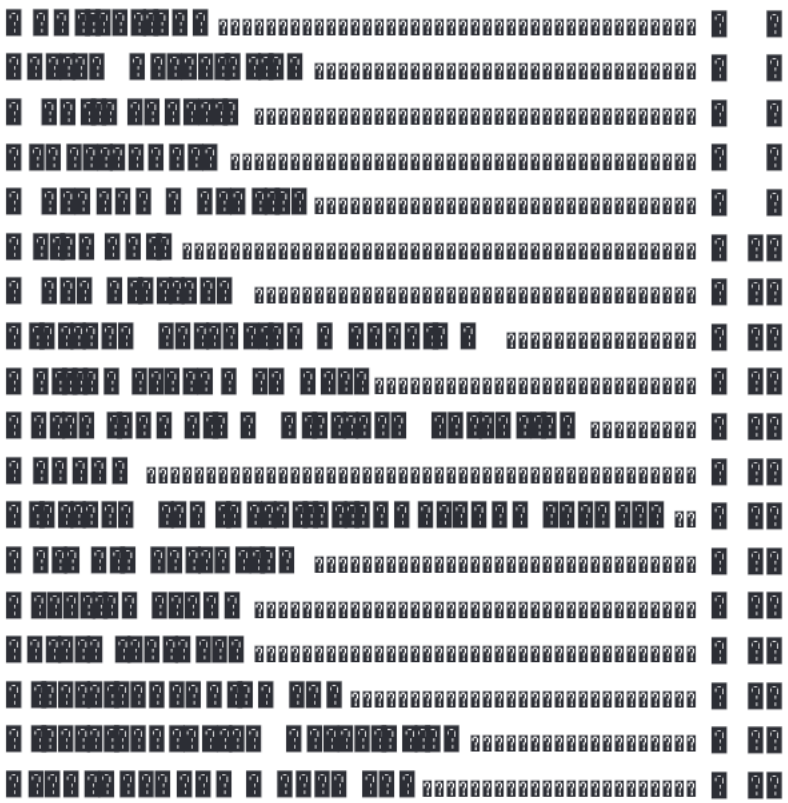
[illegible]

[illegible]

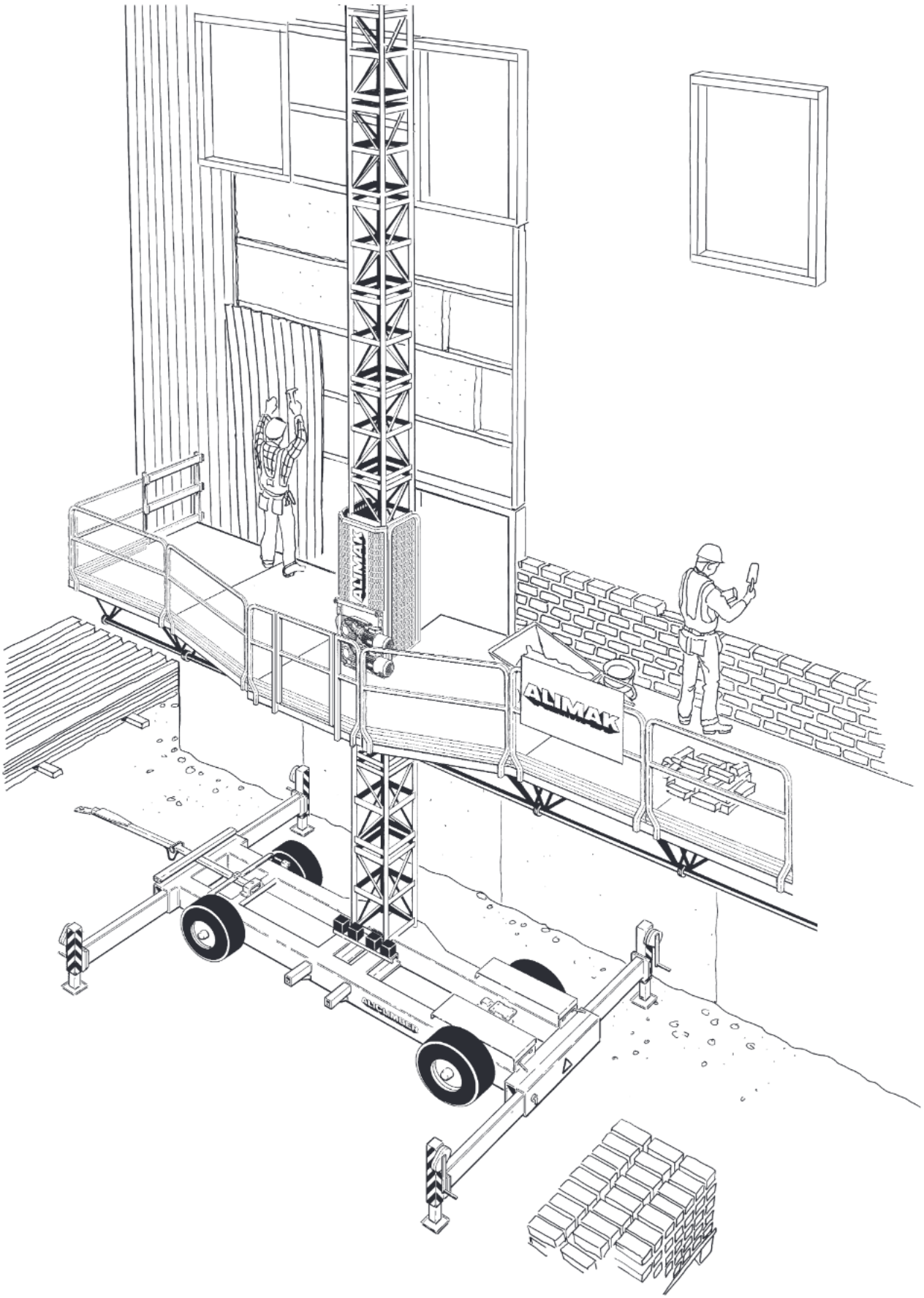
[illegible]

[illegible]

cranelistings.com



cranelistings.com



[illegible]

[illegible]

[illegible]

cranelistings.com

[illegible]

[illegible]

[illegible] [illegible] [illegible] [

[illegible]

[illegible]

[illegible]

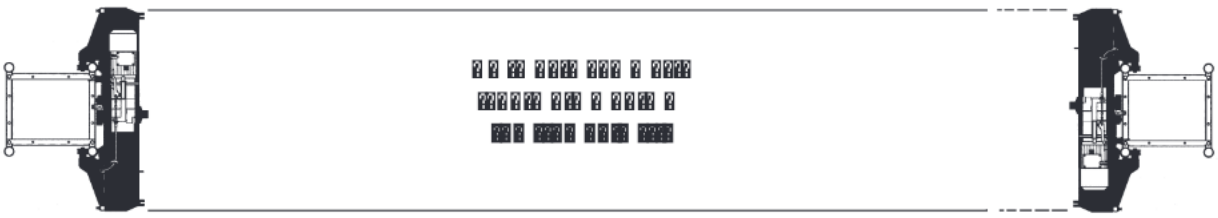


[illegible]

[illegible]

[illegible]

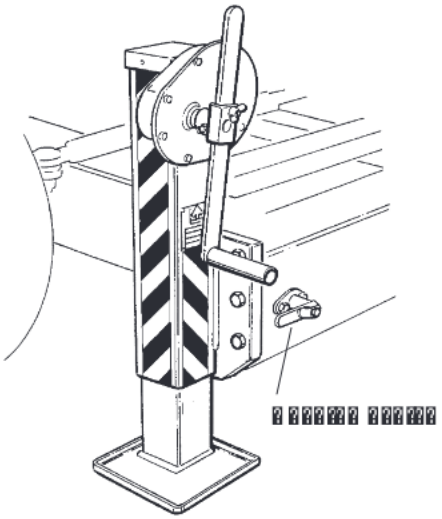
[illegible]



[illegible]

cranelistings.com

[illegible] [illegible] [illegible] [illegible]



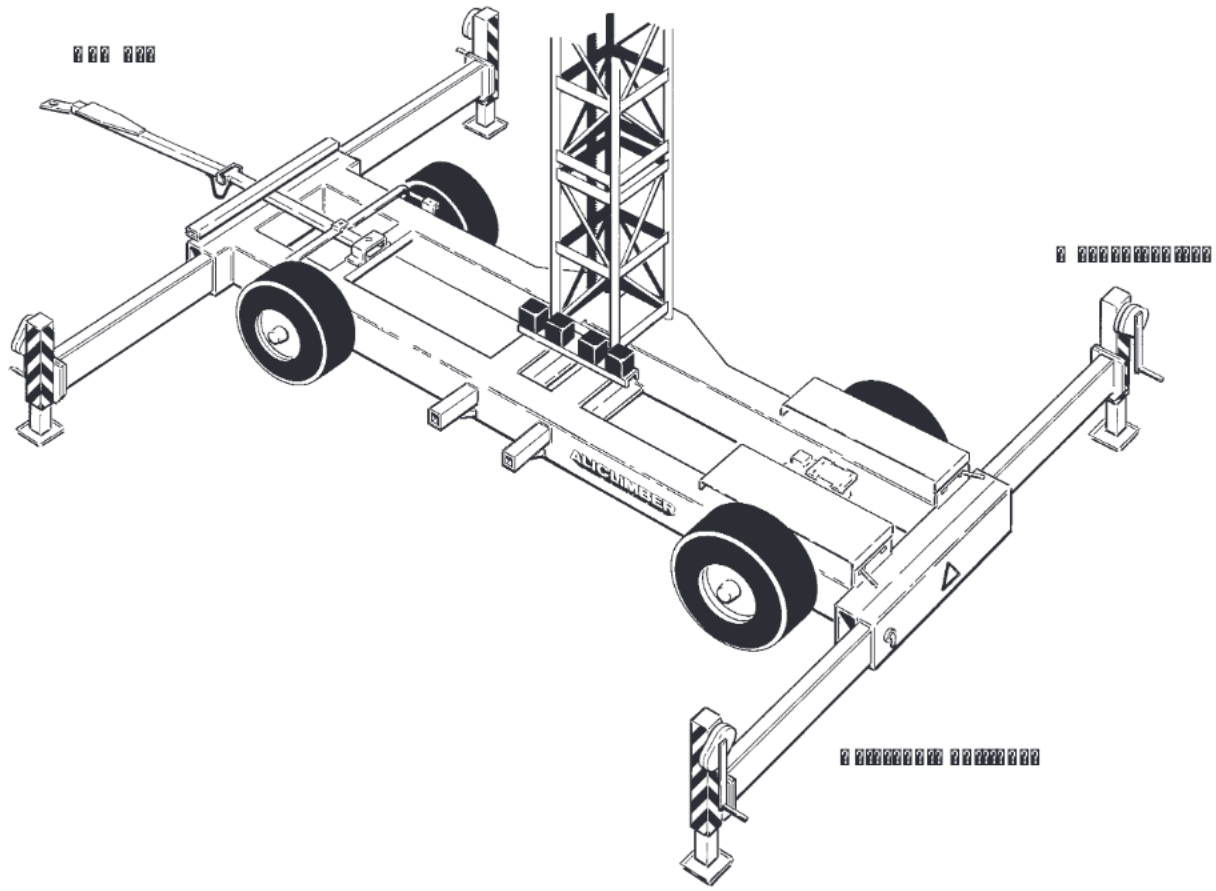
[illegible]

[illegible]

[illegible]

[illegible]

[illegible]

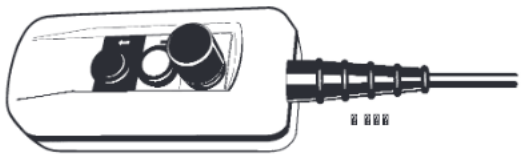


[illegible]

[illegible]

cranelistings.com

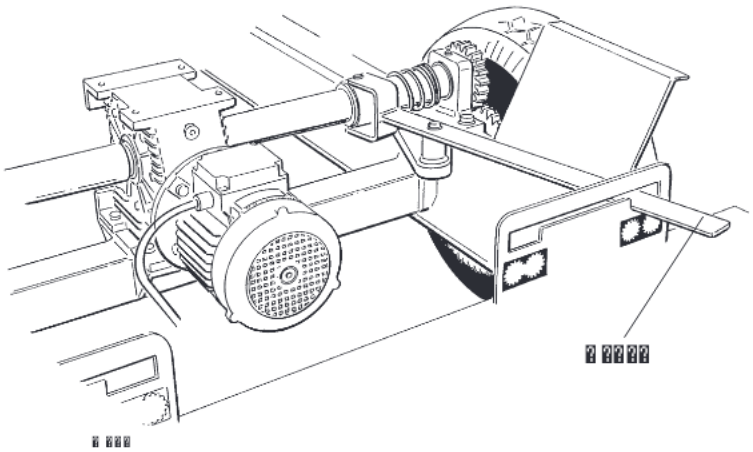
[illegible]



[illegible]

[illegible]

[illegible]



[illegible]

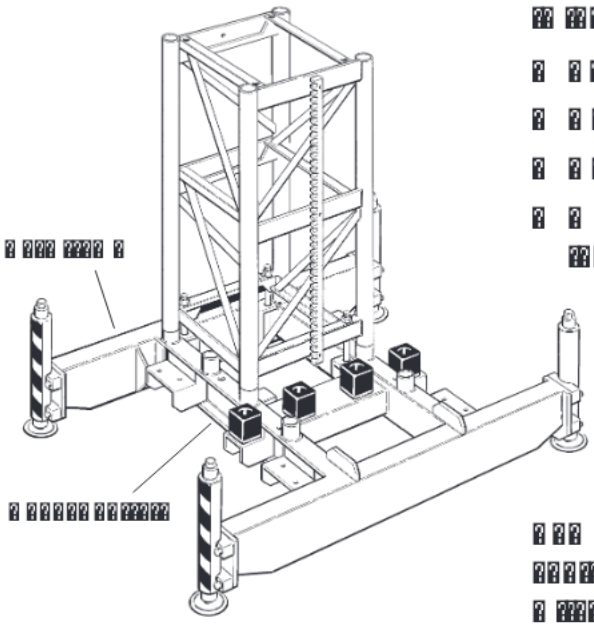
[illegible]

cranelistings.com

? ??????????

??? ????????? ????? ??????? ?? ????? ?? ?????? ?? ??? ? ????? ???????? ?? ??? ??????? ??? ???????????

- ? ??????? ???????
- ? ??? ??????? ????????
- ? ????? ???????????????????? ????????
- ? ????? ? ?????? ?? ?? ??????????????? ???? ??? ????????? ???????? ??? ? ?????? ??????? ???? ????? ??? ???? ???????? ???????

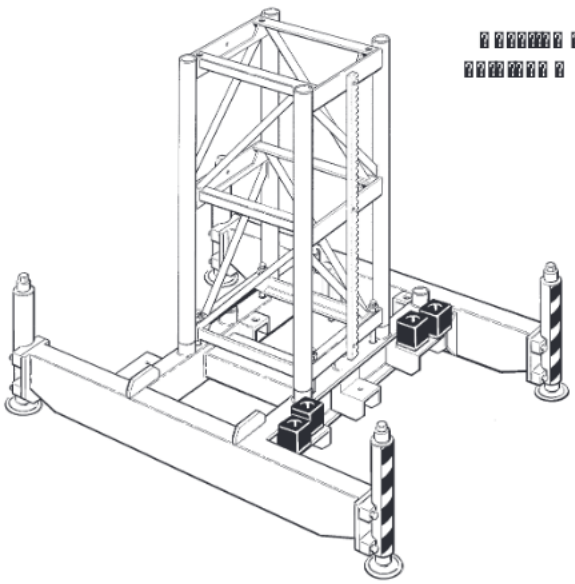


??????? ??? ???????? ??? ???????? ????????

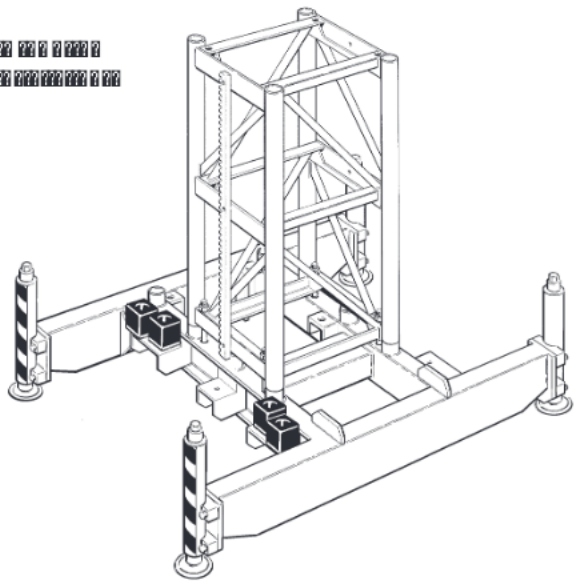
??? ????????? ????? ?? ????????????? ?? ?????? ????????? ??? ?? ????????? ? ??? ????? ? ?????? ?????? ?? ?????? ??? ????????? ??? ? ?????? ?????

? ?????? ???????? ??? ???????? ?? ??? ????? ????? ? ??? ??? ?????? ?? ?????? ?? ??????? ?????? ??????? ????????????? ? ???? ????? ?????? ?? ??????? ?????? ??????? ??? ??????? ??????? ? ??????????

? ??? ??????? ? ????? ???? ? ??? ? ???? ?? ???? ??? ? ??????????



??????? ??? ???????? ??? ??????? ??? ?????? ????????? ?? ?? ?? ????? ????? ?? ? ?????????????????



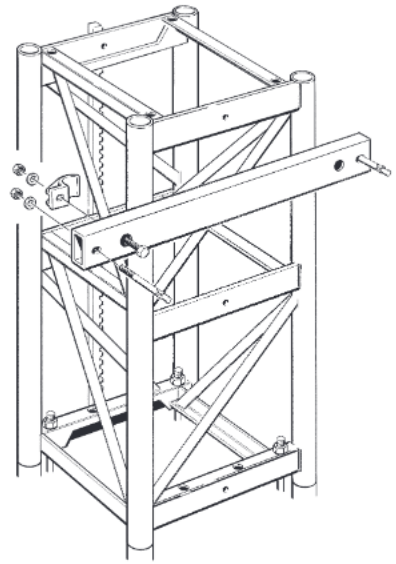
? ??? ??? ? ????? ??? ????????? ???? ?? ?? ?? ???? ??? ?????? ? ????????? ? ?????????? ? ?????

cranelistings.com

3 ...

... ...

[illegible]

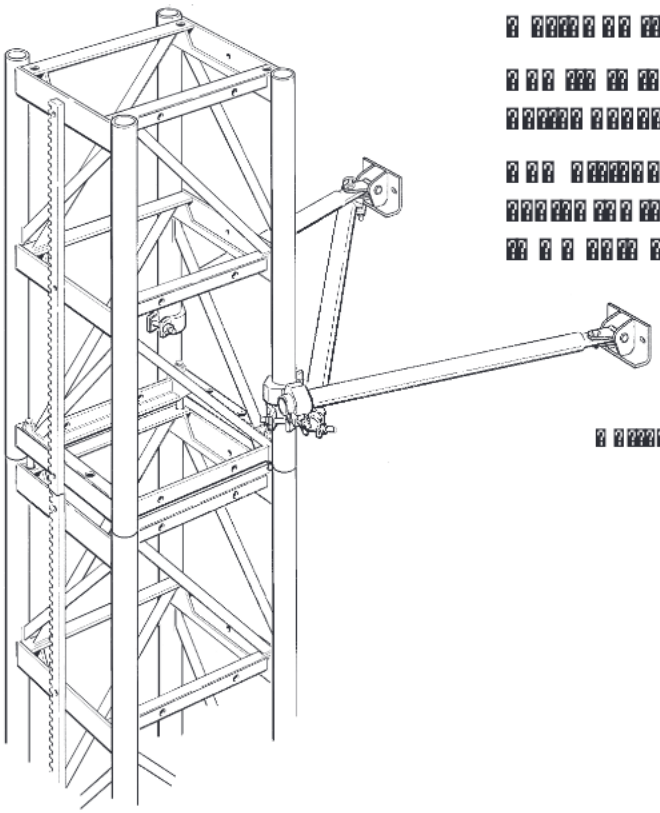


[illegible]

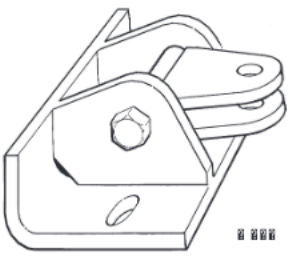
[illegible]

[illegible]

[illegible]



[illegible]



[illegible]

cranelistings.com

1 [illegible]

[illegible]

[illegible] [illegible] [illegible] [

? ???? ????

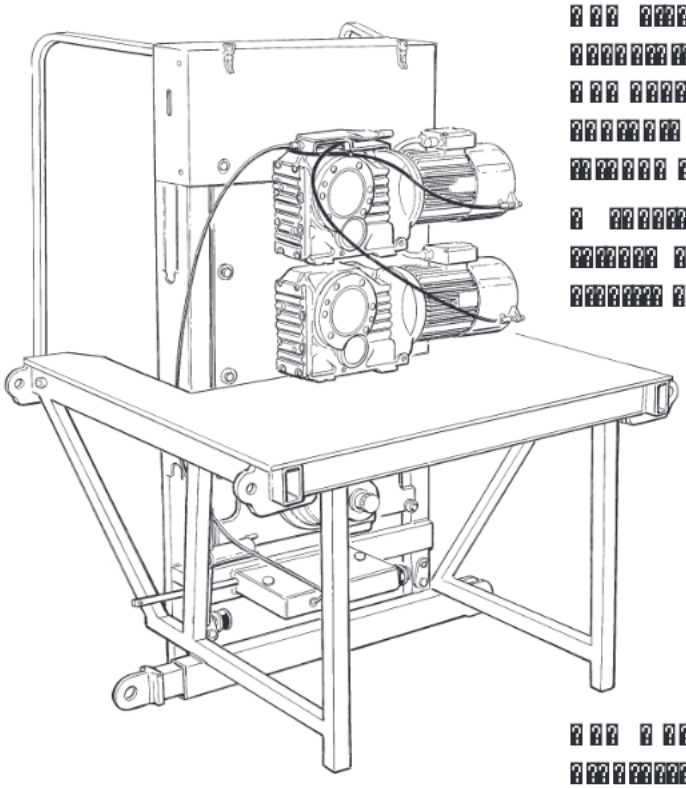
? ?????? ???? ??????? ??????? ???? ? ???? ? ??? ? ??? ????????? ??? ??? ????? ?????? ? ?? ??? ????? ??? ????????? ??????? ?????? ????? ??????? ?????? ?????????? ??????? ??????????? ??? ??????? ? ??? ??????? ?? ???? ?????

? ??? ???? ? ??? ???? ? ????? ????? ????? ??? ??? ? ? ?? ?????? ????? ? ????? ??????? ? ??????????????????????

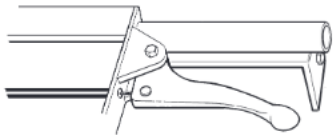
??? ???????? ???????? ? ???? ?????? ?? ??????? ????????? ? ??? ????????????

??? ???????? ????? ???????? ?? ? ???????? ?????? ??? ??? ??? ?? ?? ???????? ????? ?? ? ?? ??? ??? ???? ???? ??? ??? ???????? ???????? ? ? ?????? ? ??????? ????????? ??? ? ????????

? ???????? ??????? ?? ??? ???????? ????? ?????? ???? ??? ? ?????? ???????? ?? ??? ?????? ??? ?? ???????? ??? ?????? ?? ??? ?????? ?? ????????? ???? ?? ????????



? ???? ????????? ?

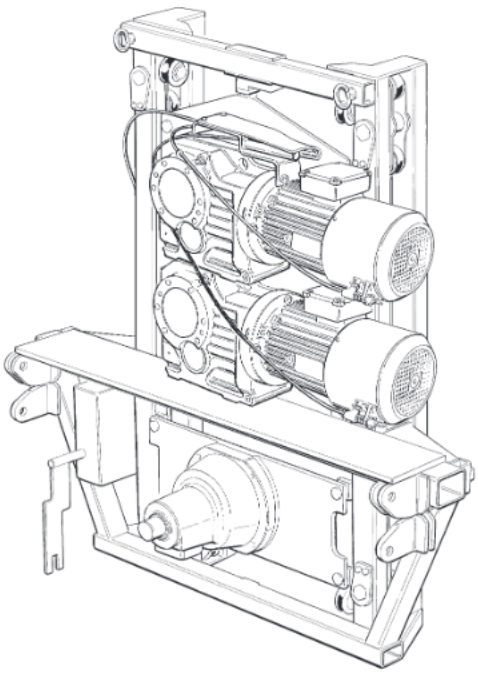


? ???? ??????? ??????

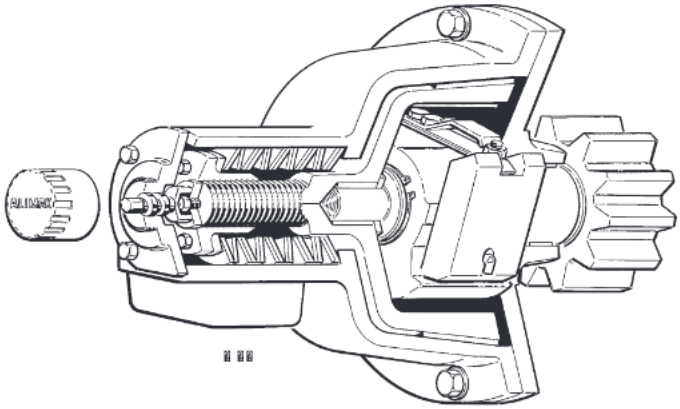
??? ? ??? ???????? ??? ?? ????????? ??????? ??????? ? ???? ?????????????? ?????? ??? ???????? ?? ??? ? ??? ??????? ????? ?? ??????? ?????? ?? ????????? ?? ? ????????? ??????

??? ??????? ??????? ??? ? ??????? ? ??? ? ?????????????? ? ?????? ??? ? ?????? ????????? ???????? ? ??? ??? ????? ?? ? ???? ? ??? ??? ??????????? ?????????????? ?????? ????? ?? ?????? ?? ?? ???????? ? ?????? ? ??????? ??????? ??? ??????? ????????? ???? ???????? ?? ???????? ?? ? ?? ???? ???? ??? ??? ?????????? ??? ??? ?? ?? ??? ????? ? ?????? ?? ???????

? ???????? ?????? ?????? ?? ??? ??????? ??????? ? ???????? ??????? ???????? ????????? ??????? ?? ??? ??????? ??????? ?????? ????? ?????????? ???????????? ?? ????? ?? ???????? ?? ??? ????????????? ??????



? ???? ????????? ?

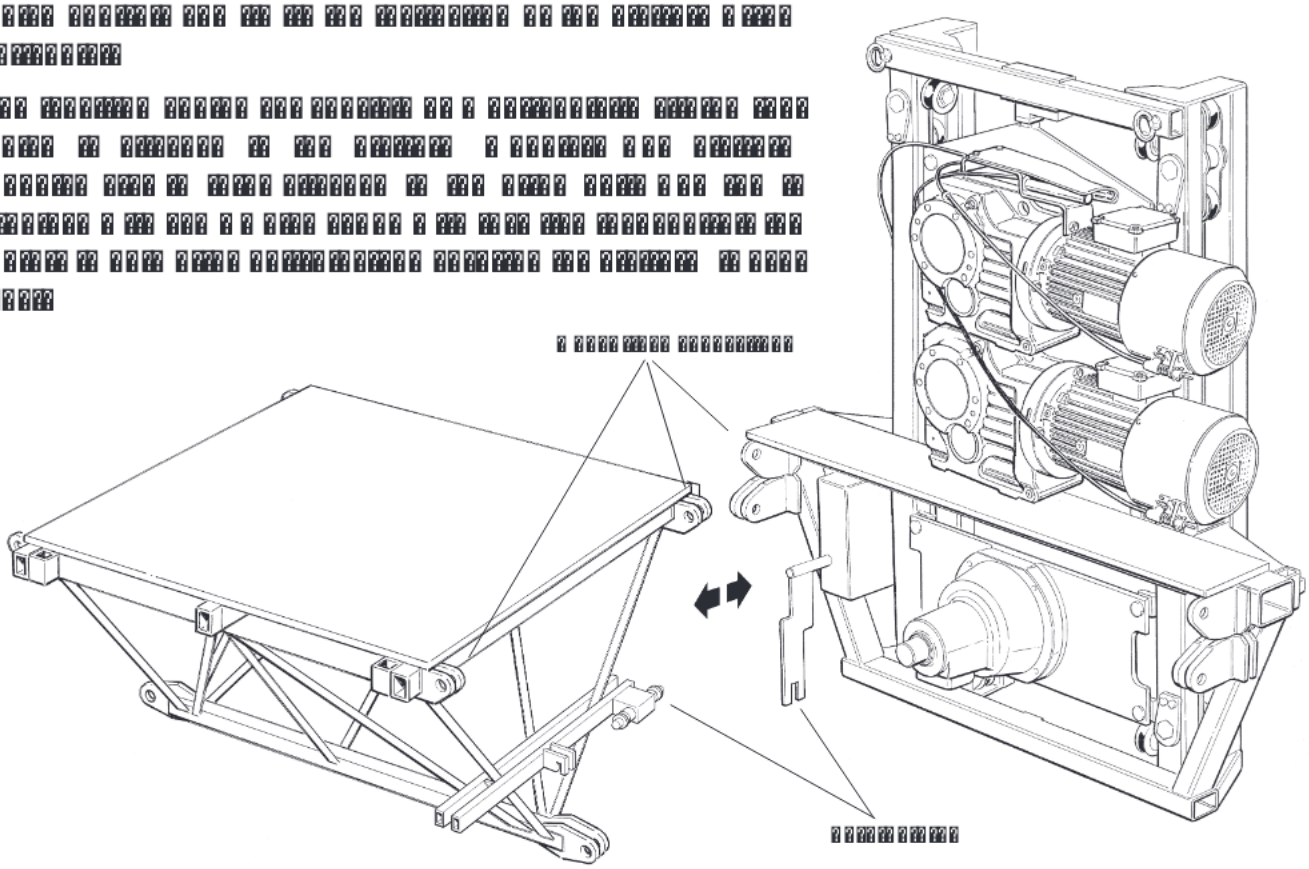


? ??

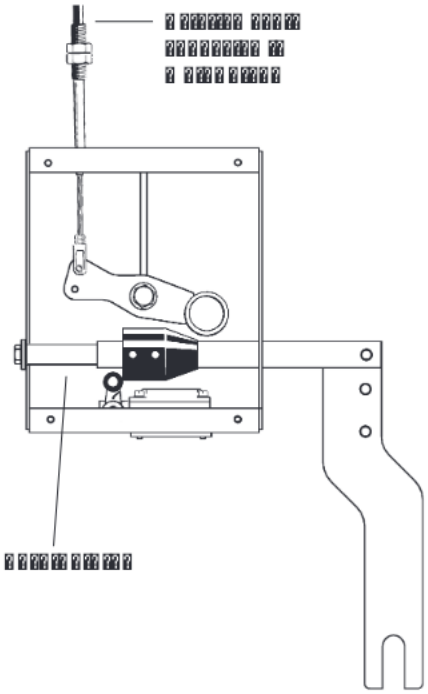
cranelistings.com

[illegible]

[illegible]



[illegible]



[illegible]

cranelistings.com

? ??? ?????? ?? ???

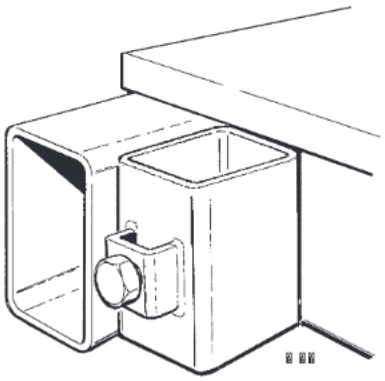
??? ??????? ???????? ?????? ?? ???? ?? ???? ?????? ? ? ?? ??? ?? ?? ???? ????????? ??? ? ? ???? ??? ? ????? ??? ????????? ?? ????????? ??? ????????

??? ??????? ???????? ??? ???????? ? ??? ? ????? ?? ? ?????? ??????? ???????? ???? ?????

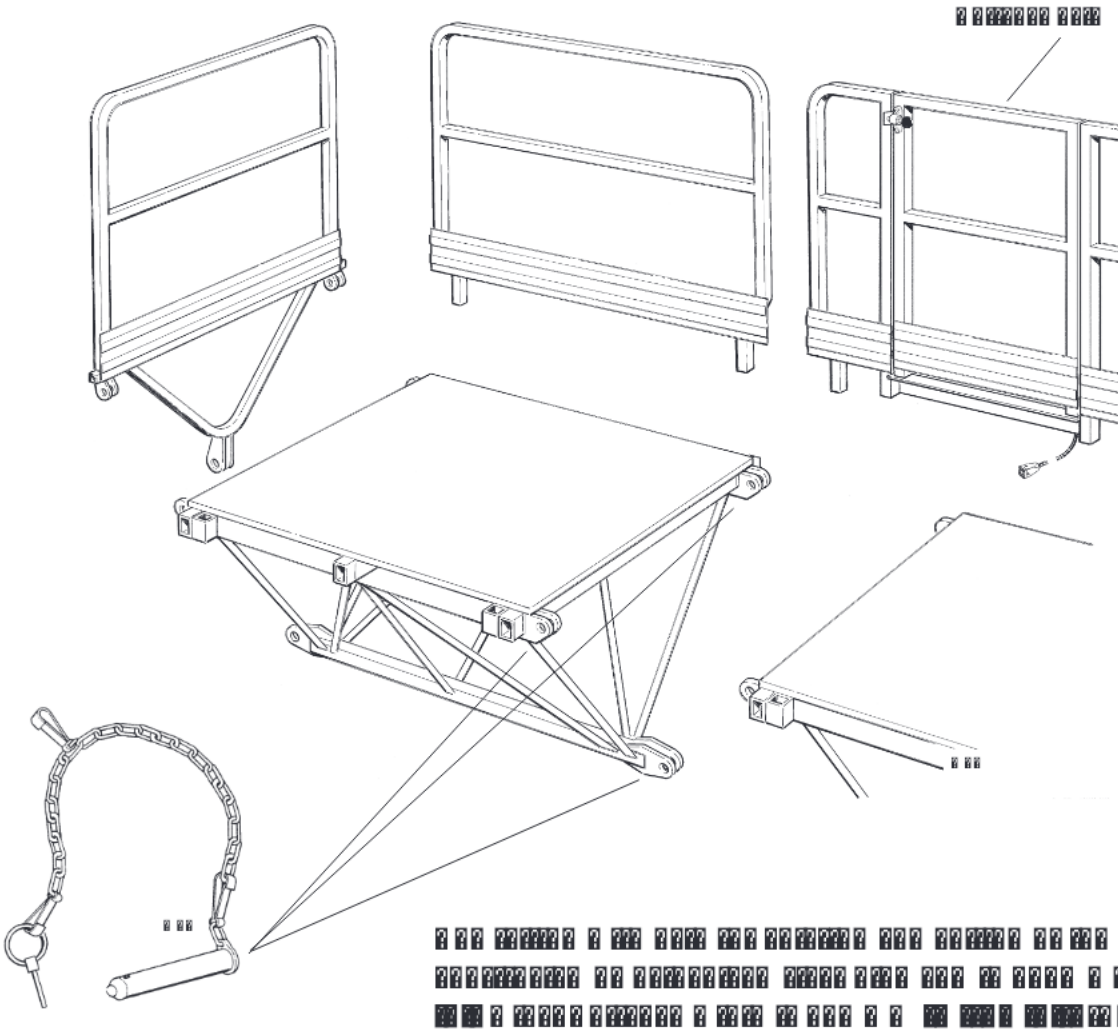
??? ??????? ???????? ??? ?????? ???? ? ??? ? ???? ??? ???? ??? ?????? ?? ????? ? ??? ??????? ?? ?? ???? ? ??? ????? ? ??? ?? ? ?????? ? ???? ?? ? ??????? ???????? ?? ????

?? ? ?? ?? ? ??? ????????? ??? ?????? ?? ??? ??????? ??? ???? ???? ??? ? ?? ???? ? ??? ?? ???? ?????? ?? ????? ? ? ????????? ??? ? ?? ???? ? ??? ?? ???? ?????? ?? ????? ?

??? ?????? ???????? ???? ?? ????????? ????????? ??????????? ?? ? ??????? ?? ???????? ??????? ?? ????? ??????? ?? ??? ??????? ??????? ??? ??????? ??? ????? ? ??? ? ?????? ??? ??? ??????? ???????? ?? ???? ?? ??? ? ? ?? ????? ?? ??? ??????????



??? ??????



??? ??????

??? ??? ?????? ?????
???????? ?????????
? ???????? ?? ? ? ?? ????????
? ???????? ?? ? ? ?? ????????

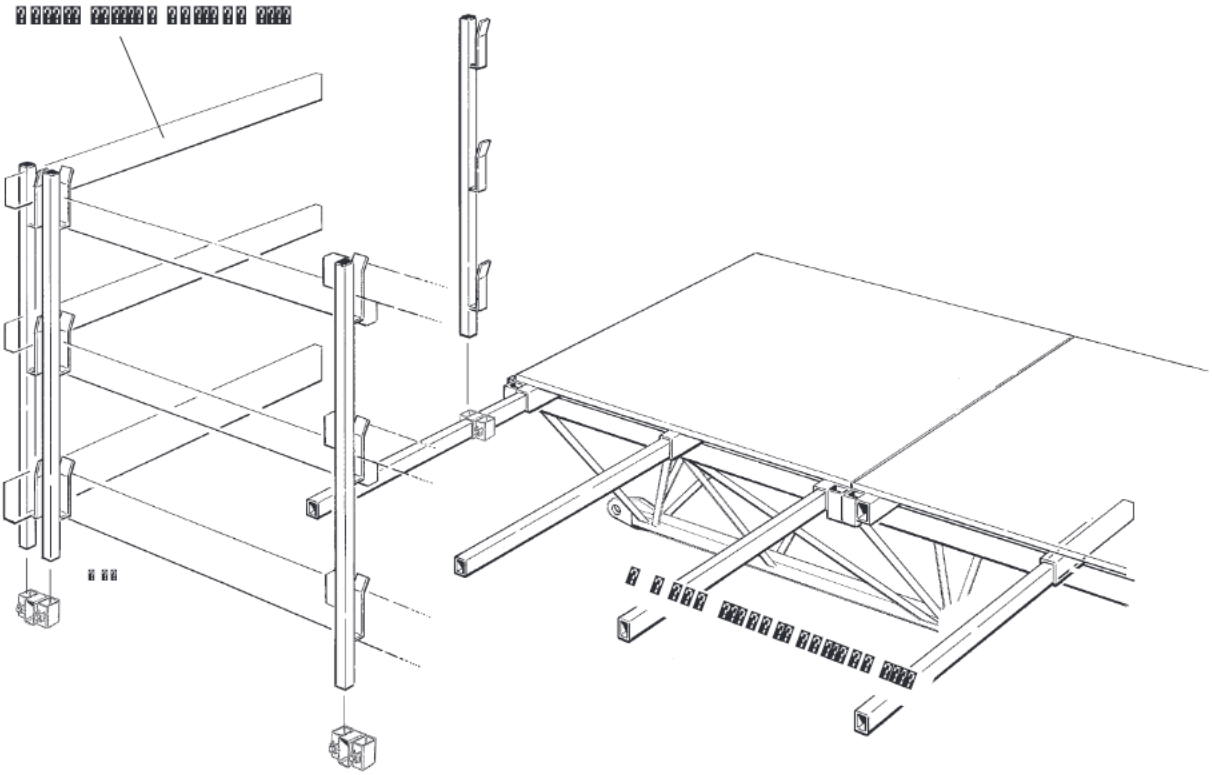
??? ??????? ? ??? ???? ??? ???????? ??? ??????? ?? ??? ???????? ?? ????????? ?? ????????? ?????? ???? ??? ?? ????? ? ? ?? ??? ?? ?? ? ?????? ????????? ? ???? ?? ??? ? ? ?? ???? ?? ?? ? ??????? ?? ??? ??? ? ? ?????? ?? ??? ??????????? ????? ? ???? ?? ? ???????? ???????? ??? ??????????? ??????????? ???? ?? ??????? ?? ? ??????? ???????? ?? ?????? ??? ??? ???????? ?? ?????????

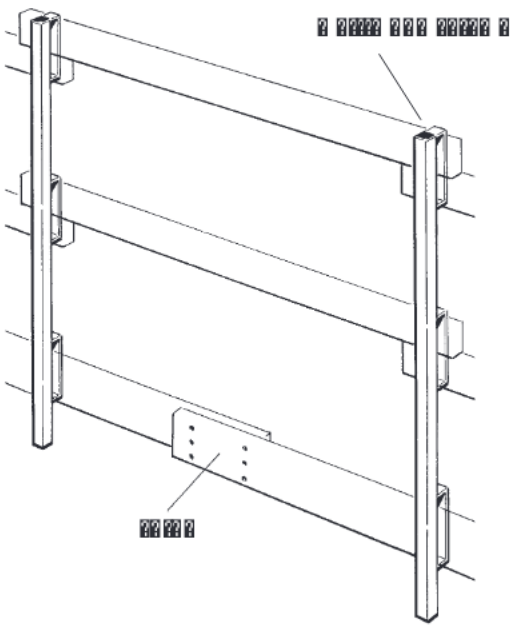
cranelistings.com

? ??????? ? ????????? ? ???? ?? ??? ? ?? ????

??? ? ??? ????? ?? ??? ??????? ????????? ?? ????????? ?? ????????? ?????? ???????? ???? ?????? ???? ??? ???? ?? ??? ? ??? ??????? ????????

??? ????????? ????? ? ??? ????????? ? ??? ??????? ????????? ?? ???? ??????? ??????? ??? ?? ??? ???? ?????? ?????? ????????????? ??? ????????? ? ?????? ???? ??????



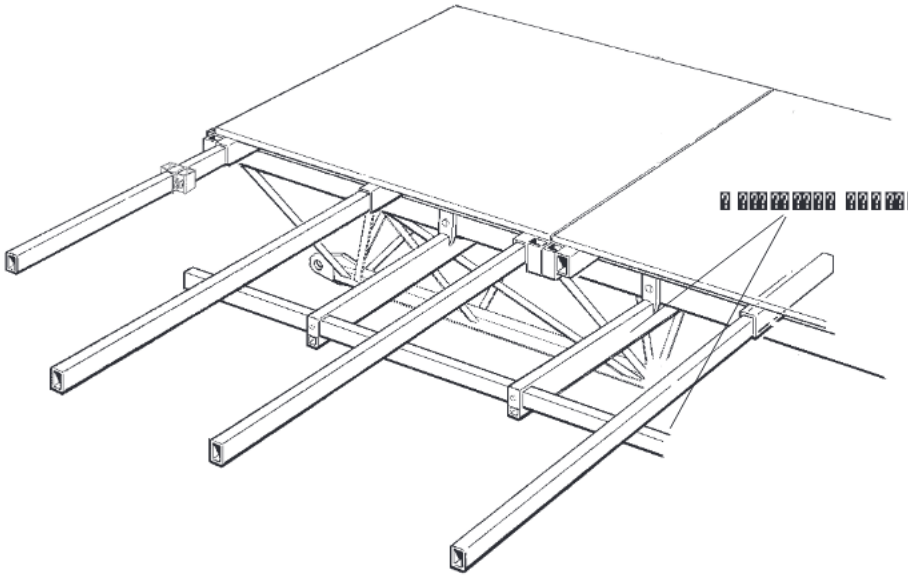


? ?????? ? ?????? ? ?? ?????

??? ??????? ?????? ? ?? ????? ? ?????? ?? ????? ??????? ????? ????? ??? ???? ?? ??????? ? ??? ??? ??????? ?????????? ?? ????????? ???????? ?? ?????????????????

cranelistings.com

....

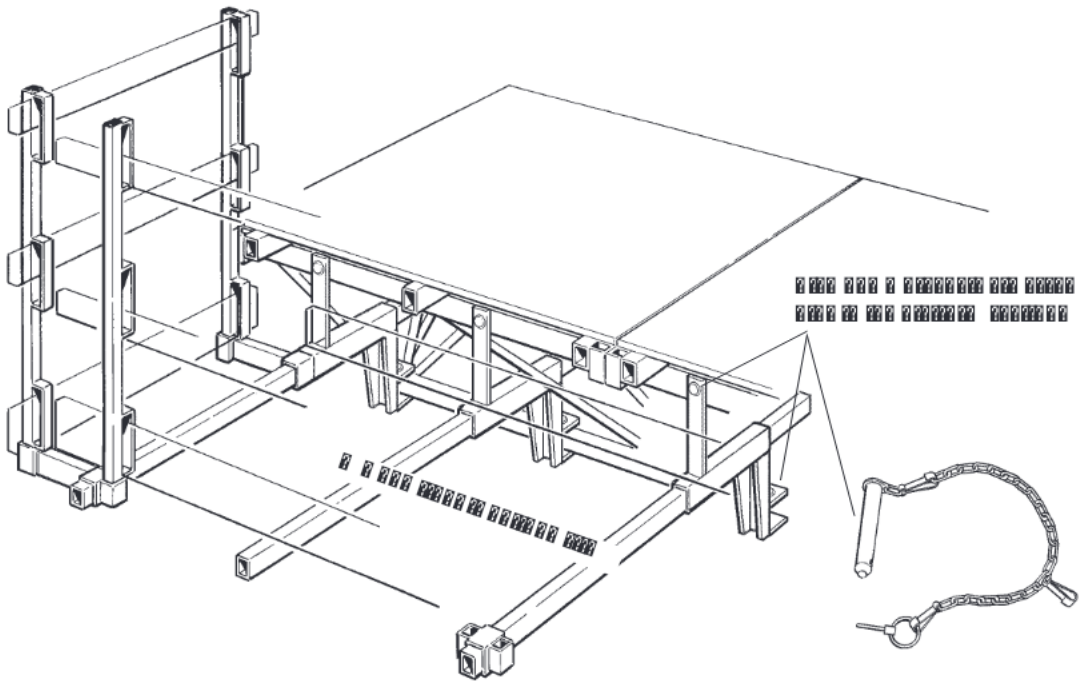


. ...

....

.. ..
. ...
....
.. ..
.....

.. ..
....



....
....

. . ..

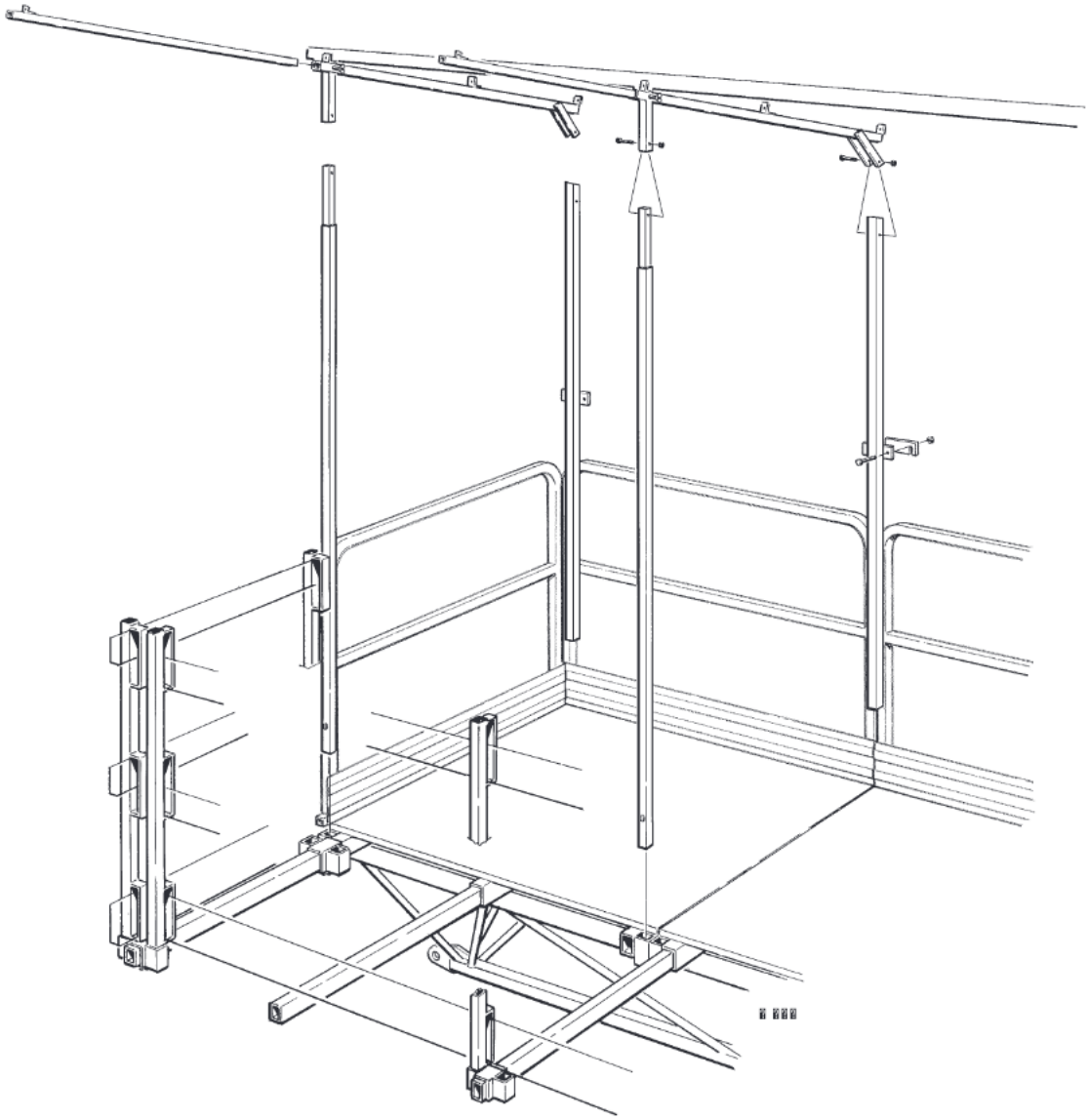
cranelistings.com

...

.. ..
... .
....
....
... .
....
....
....



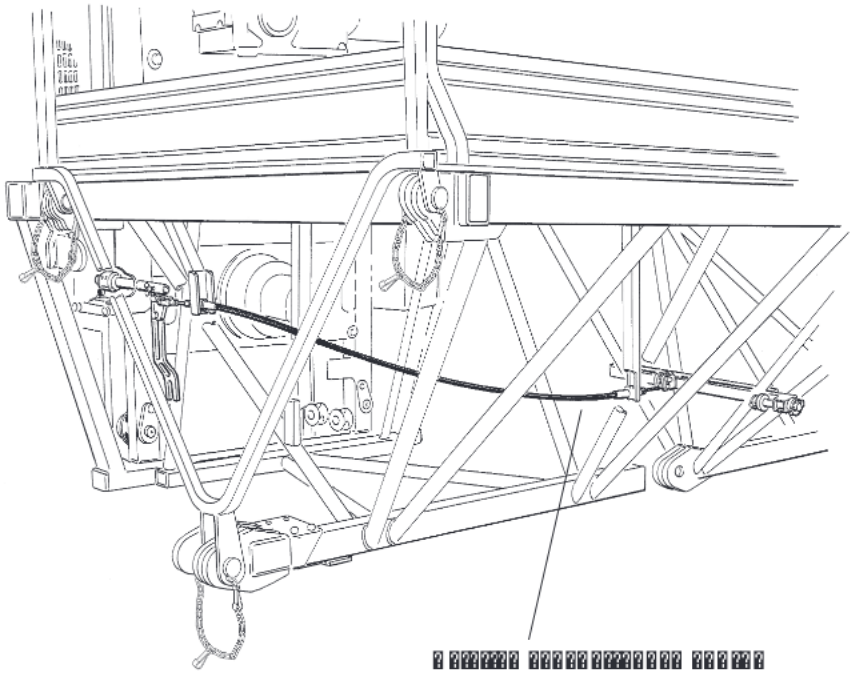
. ...



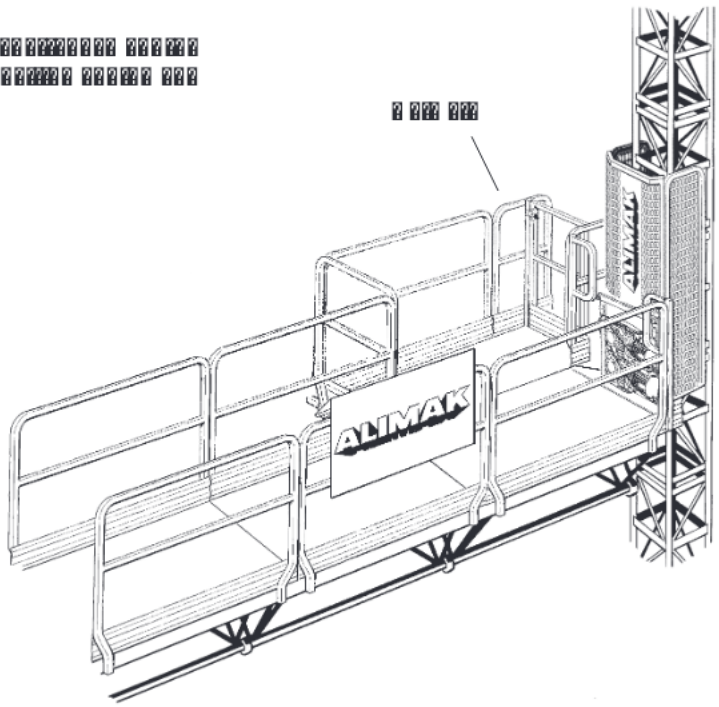
cranelistings.com

....

....



....



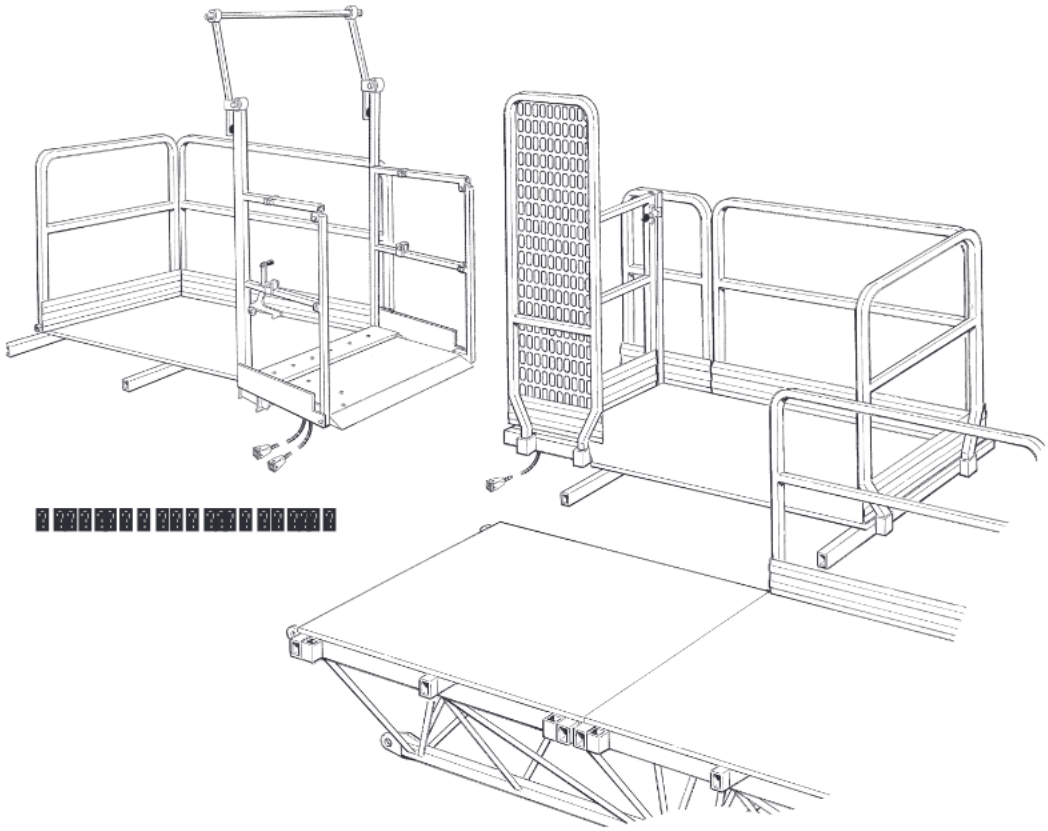
... .

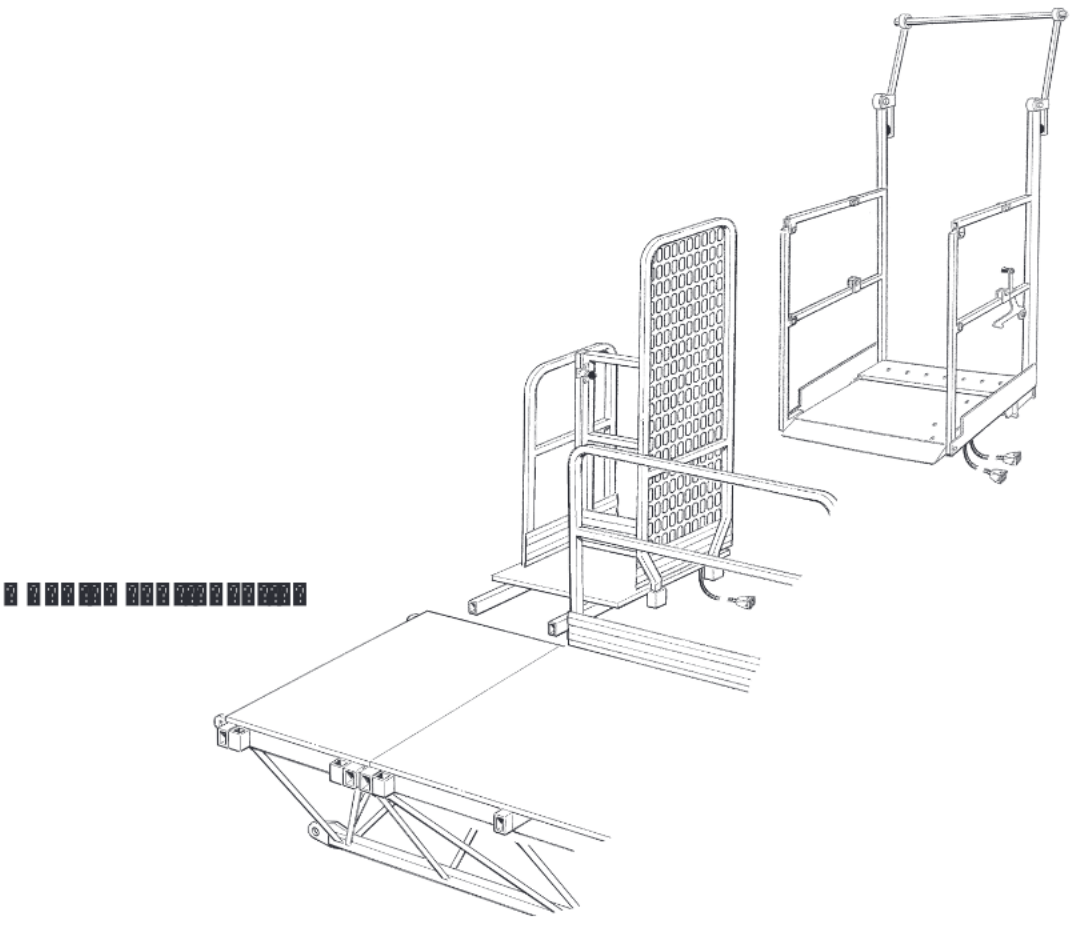
... ...
. ...
. .....

....
....

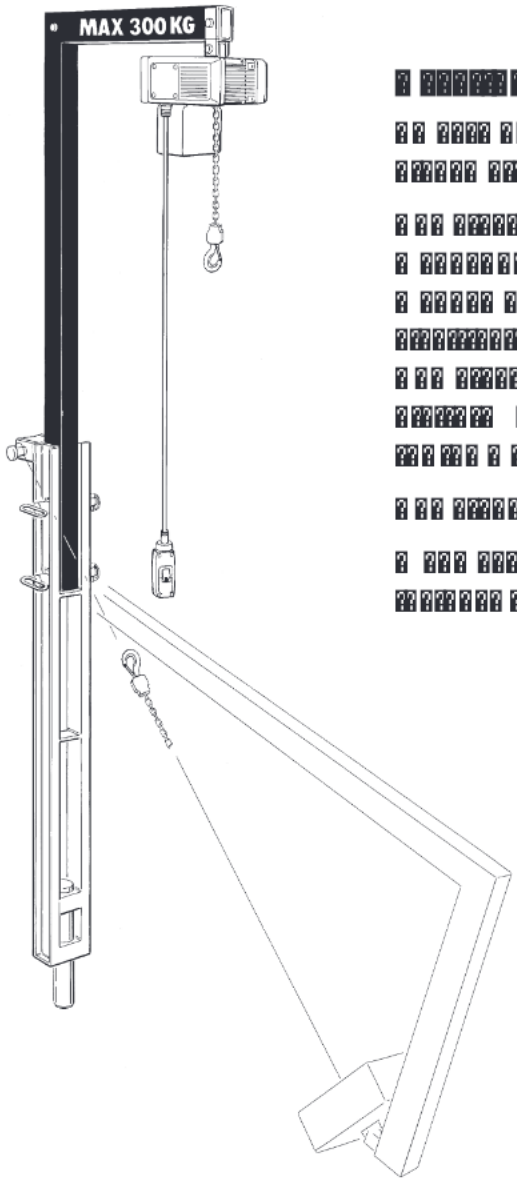
. ...

cranelistings.com





cranelistings.com


MAX 300 KG

▪ ▪▪▪▪▪▪▪ ▪▪▪▪▪▪

▪▪ ▪▪▪▪▪ ▪▪▪▪▪▪▪▪▪ ▪▪▪▪ ▪▪▪▪▪▪▪▪▪▪▪ ▪▪▪▪▪▪▪ ▪▪▪▪▪▪▪▪▪ ▪▪▪▪ ▪▪▪▪▪▪▪▪▪ ▪ ▪▪▪▪▪▪▪ ▪▪▪▪▪▪▪▪▪ ▪▪▪▪▪▪ ▪▪ ▪▪▪▪▪▪▪▪▪▪▪

▪ ▪▪▪ ▪▪▪▪▪▪▪▪▪ ▪▪▪▪▪▪ ▪▪ ▪▪ ▪▪▪▪ ▪ ▪▪▪▪▪▪▪▪ ▪▪▪▪ ▪▪▪▪ ▪▪ ▪▪▪▪▪▪▪▪▪▪ ▪ ▪▪▪ ▪ ▪▪▪▪▪▪▪▪▪▪▪▪▪▪▪▪ ▪▪▪▪▪▪▪▪▪ ▪▪▪▪▪ ▪▪▪▪▪▪▪▪▪▪▪ ▪ ▪▪▪▪▪▪▪ ▪▪▪▪ ▪▪▪▪ ▪▪▪▪▪ ▪ ▪▪▪▪▪▪▪ ▪▪▪▪ ▪▪▪▪▪ ▪▪▪▪ ▪ ▪▪▪▪▪▪▪ ▪▪▪▪ ▪▪▪▪▪ ▪▪▪▪ ▪▪▪▪▪▪▪▪▪▪▪▪

▪▪▪ ▪▪▪▪▪▪▪▪▪ ▪▪▪▪▪▪ ▪▪ ▪ ▪▪▪▪▪▪▪ ▪▪ ▪ ▪▪▪▪▪▪▪▪▪▪ ▪▪▪ ▪▪▪▪▪▪▪ ▪▪ ▪▪▪ ▪▪▪▪▪▪▪▪▪ ▪▪▪ ▪▪▪ ▪ ▪ ▪▪▪▪▪▪▪ ▪▪▪▪▪▪▪▪▪▪ ▪▪ ▪▪▪ ▪▪▪▪▪▪▪▪▪ ▪▪▪▪▪▪▪▪ ▪▪▪▪ ▪▪▪▪▪▪▪ ▪ ▪▪▪▪▪▪▪ ▪▪▪▪▪▪

▪▪▪ ▪▪▪▪▪ ▪▪ ▪▪▪▪▪▪▪▪▪▪▪▪▪ ▪▪ ▪▪▪▪▪ ▪▪▪ ▪ ▪▪▪▪▪

▪ ▪▪▪ ▪▪▪▪▪▪▪▪▪ ▪▪ ▪▪▪▪▪▪▪▪ ▪▪▪▪▪ ▪▪ ▪▪▪▪ ▪▪ ▪▪▪▪▪ ▪▪▪▪▪ ▪ ▪▪▪▪▪ ▪▪▪▪▪▪▪▪▪ ▪▪▪ ▪ ▪▪▪▪▪▪▪▪▪ ▪▪▪ ▪ ▪▪▪▪▪▪▪▪▪ ▪▪▪▪▪▪

▪ ▪▪▪▪▪▪▪ ▪▪▪▪▪▪ ▪▪▪▪▪▪▪ ▪▪▪▪

- ▪ ▪▪▪▪▪▪ ▪▪▪▪▪▪▪ ▪ ▪▪▪▪ ▪▪ ▪▪▪▪▪▪▪▪▪▪ ▪▪ ▪▪▪▪▪▪▪▪▪▪ ▪▪▪▪ ▪▪▪▪▪▪▪ ▪▪▪ ▪ ▪▪▪ ▪▪▪▪▪▪▪▪ ▪▪ ▪ ▪▪▪▪▪▪▪▪▪▪▪ ▪▪▪▪▪▪
- ▪ ▪▪▪▪▪▪▪▪▪▪▪▪▪ ▪▪▪▪▪▪▪▪ ▪▪▪▪▪▪▪ ▪▪▪▪▪▪ ▪ ▪▪▪▪ ▪▪ ▪▪ ▪▪▪▪▪▪▪▪▪ ▪▪ ▪▪▪▪▪ ▪▪▪▪▪ ▪▪▪▪▪▪ ▪▪▪ ▪▪ ▪▪▪▪▪▪▪ ▪▪▪▪▪
- ▪ ▪▪▪▪ ▪▪▪▪ ▪▪▪▪▪▪▪ ▪▪▪▪▪▪▪▪▪ ▪▪▪▪▪ ▪▪▪▪▪
- ▪ ▪ ▪▪▪▪▪▪▪▪▪ ▪▪▪▪▪▪▪ ▪▪▪▪▪▪▪ ▪ ▪▪▪▪ ▪▪▪▪▪▪▪ ▪ ▪▪▪▪ ▪▪▪▪▪▪▪▪▪ ▪▪▪▪ ▪▪ ▪▪ ▪▪ ▪▪▪▪▪▪▪▪▪▪
- ▪ ▪ ▪▪▪▪ ▪▪▪▪ ▪▪▪▪▪▪▪▪▪▪▪▪▪▪▪▪

■ ■■■■■■■■■■■■■■■ ■■■

■■■ ■■■■■■■■■■ ■■■■■■■ ■■■ ■■■ ■■■ ■ ■■■ ■■■■■■■■ ■■ ■■■■■■■■■ ■■■ ■■■■■■■ ■ ■■■■■■■■■ ■■■ ■■■■■■ ■ ■■■■■■■ ■■■■■■■■■■ ■■■■ ■■■■ ■■■■■■ ■■ ■■■■■■■■■■■■ ■■■■■■■■ ■■ ■■■■ ■■■■■■■■ ■■■ ■ ■■■■■■■■■■ ■■■ ■ ■■■ ■ ■■■ ■■■ ■■ ■■■■■■■■■ ■ ■■■■■■■■■■■■■■ ■■■■■■■■■■■■ ■■■■■ ■■ ■■■■■■■■■■■■■■■

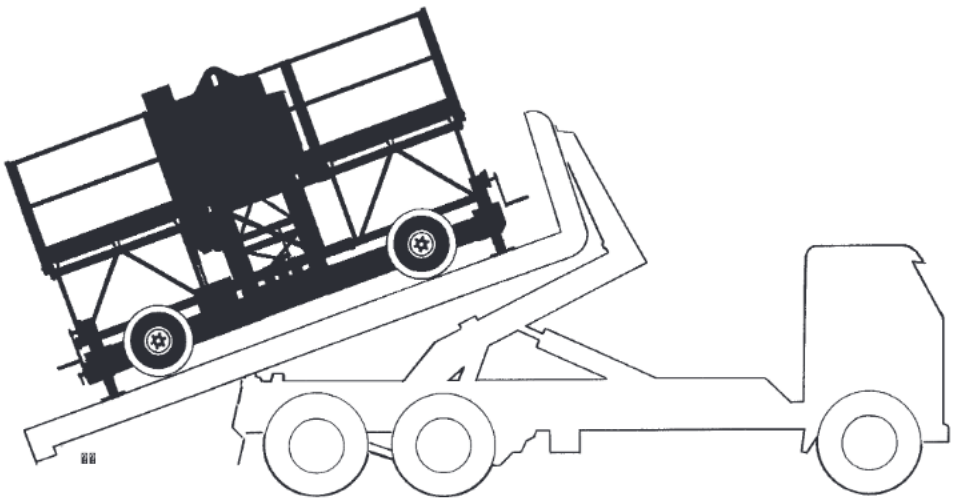
■ ■■■

...

... ...

▪▪▪▪▪▪▪▪▪▪▪▪▪ ▪ ▪▪▪▪▪ ▪▪▪▪

▪▪▪ ▪ ▪▪▪▪▪▪ ▪▪▪▪ ▪▪ ▪▪▪ ▪▪ ▪▪ ▪ ▪▪▪▪▪ ▪▪ ▪▪▪ ▪▪▪ ▪ ▪▪▪▪▪ ▪▪▪▪ ▪▪▪▪▪▪▪▪ ▪▪▪▪▪ ▪▪▪▪▪▪ ▪▪▪▪▪▪▪▪▪▪▪ ▪▪▪▪ ▪▪▪▪▪▪▪ ▪▪▪▪▪▪▪▪▪▪ ▪▪ ▪▪ ▪▪▪▪▪▪ ▪ ▪▪▪▪▪▪ ▪▪▪▪ ▪▪▪▪▪▪▪▪ ▪▪▪▪▪▪▪▪▪ ▪▪▪▪▪▪▪▪ ▪▪ ▪▪▪▪▪▪ ▪ ▪▪▪ ▪ ▪▪▪▪▪▪▪ ▪▪▪▪ ▪▪▪▪▪▪▪▪▪ ▪▪▪▪▪▪▪▪▪▪▪▪▪▪▪▪ ▪▪▪▪▪▪ ▪▪▪▪ ▪ ▪▪▪▪▪▪▪▪▪▪▪▪▪▪▪ ▪▪▪▪ ▪▪ ▪▪▪▪ ▪▪ ▪▪▪ ▪▪▪▪▪▪▪▪ ▪ ▪ ▪ ▪ ▪▪▪ ▪ ▪▪▪ ▪▪▪ ▪▪▪▪ ▪▪ ▪▪▪▪ ▪▪▪▪▪▪ ▪▪▪▪▪▪ ▪▪▪▪▪▪▪▪▪▪▪▪▪▪▪▪ ▪▪ ▪▪▪▪▪▪▪ ▪▪▪▪▪▪



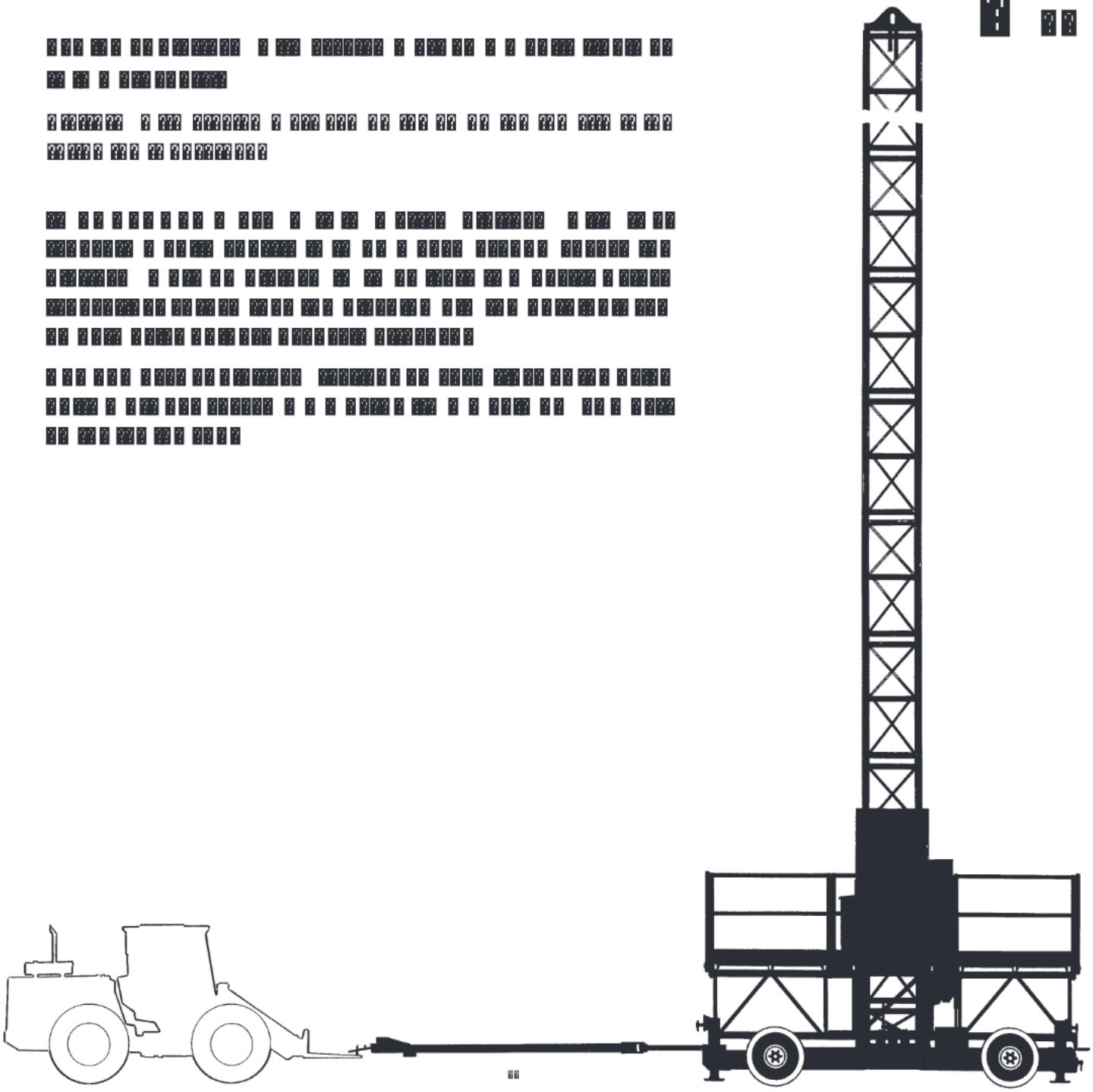
▪▪▪ ▪▪▪ ▪▪▪▪▪▪▪▪▪▪▪ ▪ ▪▪▪▪▪▪▪ ▪▪▪

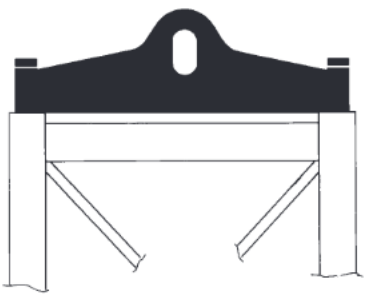
▪▪▪ ▪▪▪▪▪▪▪▪▪▪▪ ▪ ▪▪▪ ▪▪ ▪▪▪▪ ▪▪▪▪▪▪▪ ▪▪▪▪▪▪▪▪▪ ▪▪▪▪ ▪▪▪▪▪▪▪▪ ▪ ▪▪▪ ▪▪▪▪▪▪▪▪ ▪ ▪▪▪ ▪▪▪▪ ▪▪ ▪▪▪ ▪▪▪▪ ▪▪ ▪▪▪▪ ▪▪ ▪▪▪▪▪ ▪▪ ▪▪▪ ▪▪▪▪▪▪▪ ▪▪▪▪▪▪▪▪

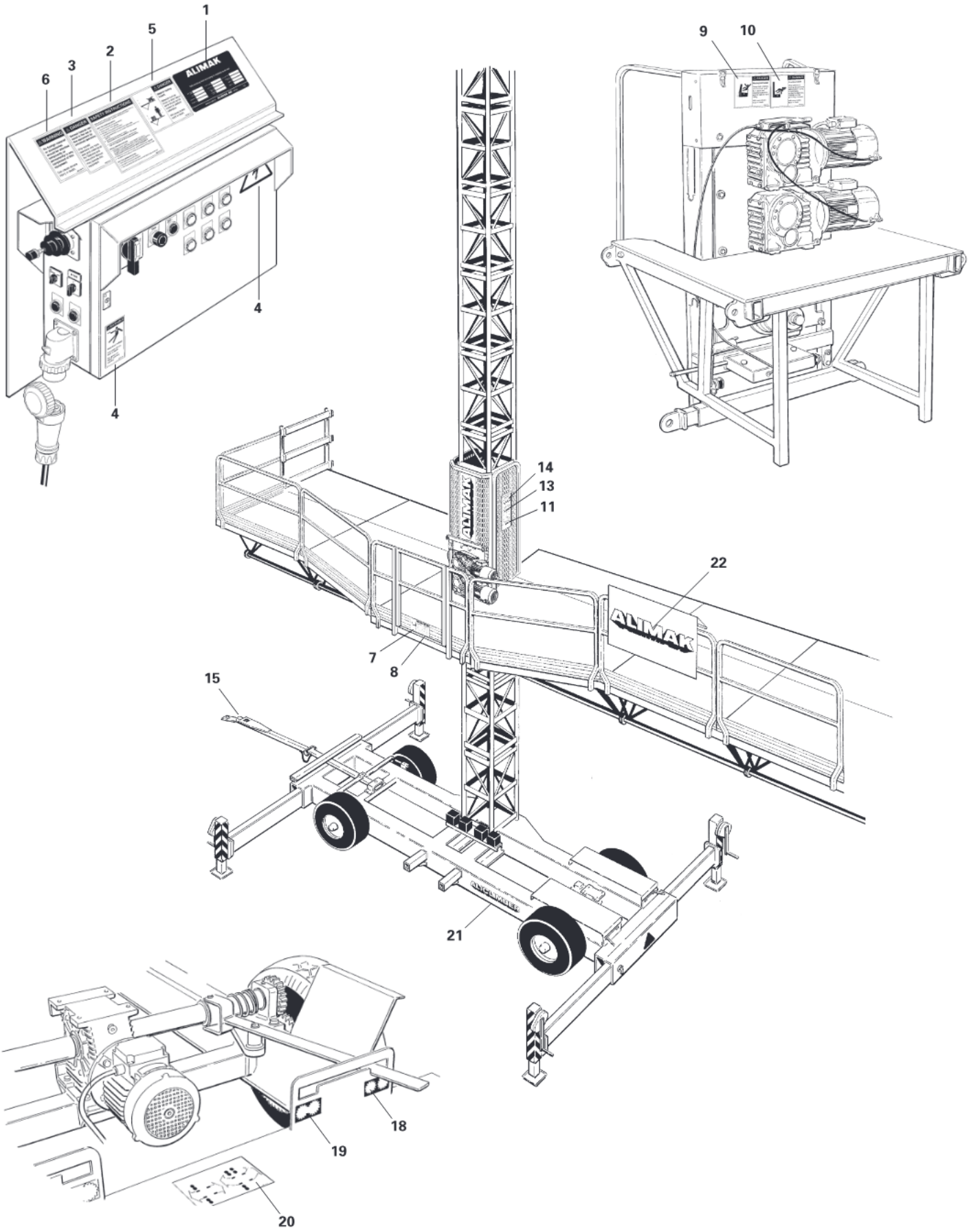
▪ ▪▪▪▪ ▪▪ ▪▪▪▪▪ ▪▪▪▪ ▪▪▪▪▪▪ ▪ ▪▪▪ ▪▪▪ ▪▪▪ ▪▪ ▪▪ ▪▪ ▪▪ ▪▪▪ ▪ ▪▪▪▪



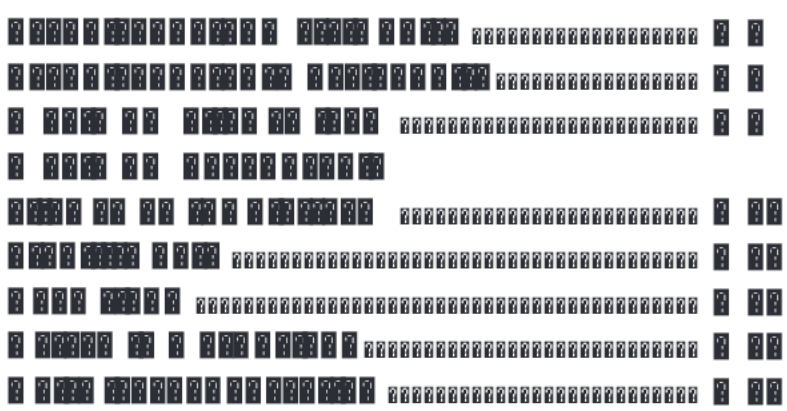
cranelistings.com



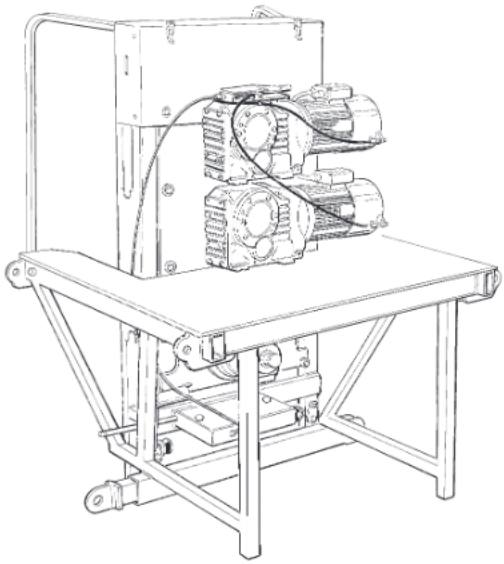


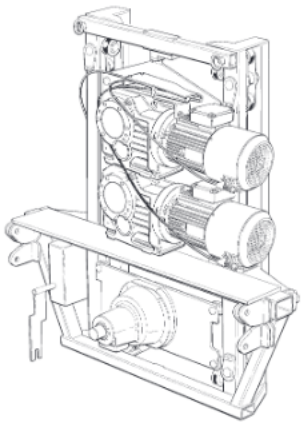


cranelistings.com



cranelistings.com





cranelistings.com

[illegible]

[illegible]	[illegible]		[illegible]	
	[illegible]	[illegible]	[illegible]	[illegible]
[illegible]	[illegible]	[illegible]	[illegible]	[illegible]
[illegible]	[illegible]	[illegible]	[illegible]	[illegible]
[illegible]	[illegible]	[illegible]	[illegible]	[illegible]
[illegible]	[illegible]	[illegible]	[illegible]	[illegible]
[illegible]	[illegible]	[illegible]	[illegible]	[illegible]
[illegible]	[illegible]	[illegible]	[illegible]	[illegible]
[illegible]	[illegible]	[illegible]	[illegible]	[illegible]
[illegible]	[illegible]	[illegible]	[illegible]	[illegible]
[illegible]	[illegible]	[illegible]	[illegible]	[illegible]
[illegible]	[illegible]	[illegible]	[illegible]	[illegible]
[illegible]	[illegible]	[illegible]	[illegible]	[illegible]
[illegible]	[illegible]	[illegible]	[illegible]	[illegible]
[illegible]	[illegible]	[illegible]	[illegible]	[illegible]

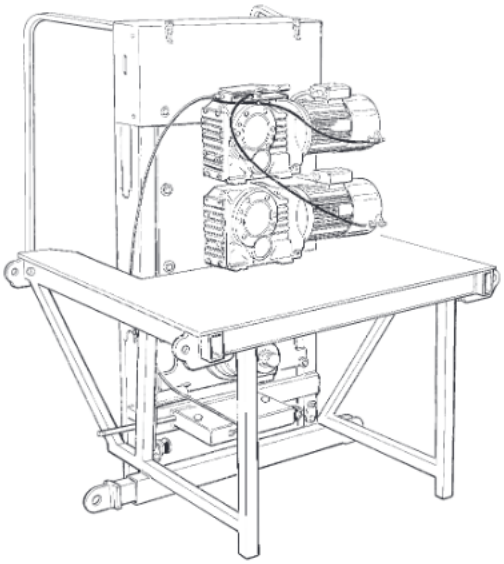
[illegible]

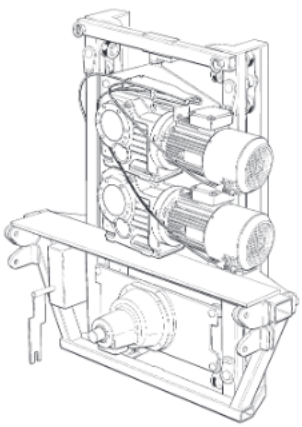
[illegible]	[illegible]	[illegible]
[illegible]	[illegible]	[illegible]
[illegible]	[illegible]	[illegible]
[illegible]	[illegible]	[illegible]
[illegible]	[illegible]	[illegible]
[illegible]	[illegible]	[illegible]
[illegible]	[illegible]	[illegible]
[illegible]	[illegible]	[illegible]
[illegible]	[illegible]	[illegible]
[illegible]	[illegible]	[illegible]
[illegible]	[illegible]	[illegible]
[illegible]	[illegible]	[illegible]

[illegible]

[illegible]	[illegible]	[illegible]	[illegible]	[illegible]
[illegible]	[illegible]	[illegible]	[illegible]	[illegible]
[illegible]	[illegible]	[illegible]	[illegible]	[illegible]
[illegible]	[illegible]	[illegible]	[illegible]	[illegible]
[illegible]	[illegible]	[illegible]	[illegible]	[illegible]
[illegible]	[illegible]	[illegible]	[illegible]	[illegible]
[illegible]	[illegible]	[illegible]	[illegible]	[illegible]

cranelistings.com





cranelistings.com

[illegible]

[illegible]	[illegible]	[illegible]	[illegible]	[illegible]
[illegible]	[illegible]	[illegible]	[illegible]	[illegible]

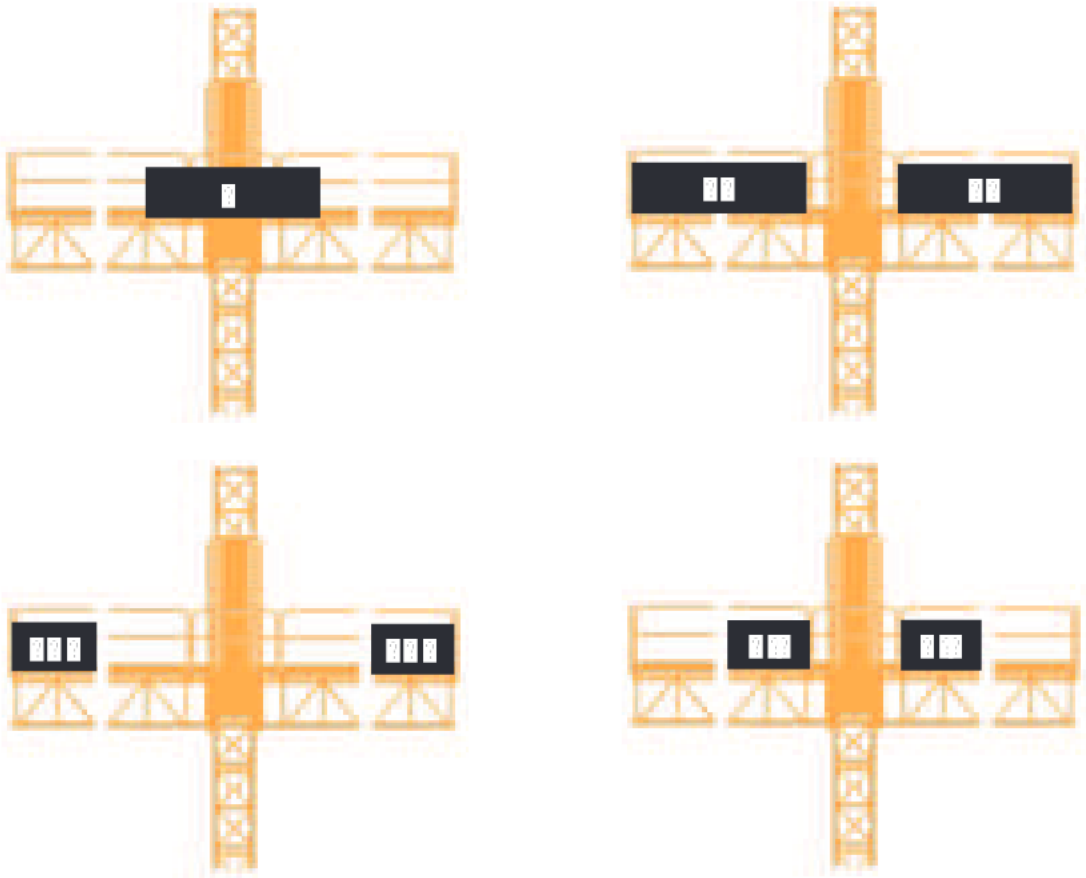
? ??? ?? ????? ?? ??????

????????? ?? ??? ?????? ?? ? ?????

??? ?????? ??? ??????? ????? ????????????????? ????????????????? ?????? ??????? ?????????????
????????? ??? ?? ????????????????

? ????? ?????? ?? ?????? ??????? ?? ???????? ????????????? ????? ?????? ?????

? ??? ?? ???? ? ?????? ? ??????????????? ??? ?????? ??????? ????? ? ?????? ?



?? ? ? ??? ??? ?? ??? ??????????? ???????? ????????
? ? ??????? ??????
? ? ??????????? ???????? ?????? ???? ???? ???????????
?? ? ? ???? ?? ??????? ????????? ????????????? ?? ???? ????
??? ? ? ???? ?? ??????????? ???? ?? ??????? ????????? ???????
?? ? ? ???? ?? ??????????? ???? ?? ??????? ????????? ???????

??? ??? ?? ??? ?? ? ??????????? ?????? ?? ?? ??? ?? ? ??? ? ??? ??????? ??????? ??? ?????????? ???????? ?
??? ??? ???????? ??????????? ?? ????????????? ???? ????????? ? ?????? ??? ???? ?? ? ???? ???? ?? ???????
?? ???? ???? ??? ???? ?? ??? ?????? ? ??? ?? ??? ???? ?? ? ? ???? ?? ???? ?? ? ??? ?? ?????? ? ?????
??????????

cranelistings.com

[illegible]

[illegible]				[illegible]			[illegible]			
[illegible]	[illegible]	[illegible]	[illegible]	[illegible]	[illegible]	[illegible]	[illegible]	[illegible]	[illegible]	[illegible]
[illegible]	[illegible]	[illegible]	[illegible]	[illegible]	[illegible]	[illegible]	[illegible]	[illegible]	[illegible]	[illegible]
[illegible]	[illegible]	[illegible]	[illegible]	[illegible]	[illegible]	[illegible]	[illegible]	[illegible]	[illegible]	[illegible]
[illegible]	[illegible]	[illegible]	[illegible]	[illegible]	[illegible]	[illegible]	[illegible]	[illegible]	[illegible]	[illegible]
[illegible]	[illegible]	[illegible]	[illegible]	[illegible]	[illegible]	[illegible]	[illegible]	[illegible]	[illegible]	[illegible]
[illegible]	[illegible]	[illegible]	[illegible]	[illegible]	[illegible]	[illegible]	[illegible]	[illegible]	[illegible]	[illegible]
[illegible]	[illegible]	[illegible]	[illegible]	[illegible]	[illegible]	[illegible]	[illegible]	[illegible]	[illegible]	[illegible]
[illegible]	[illegible]	[illegible]	[illegible]	[illegible]	[illegible]	[illegible]	[illegible]	[illegible]	[illegible]	[illegible]
[illegible]	[illegible]	[illegible]	[illegible]	[illegible]	[illegible]	[illegible]	[illegible]	[illegible]	[illegible]	[illegible]
[illegible]	[illegible]	[illegible]	[illegible]	[illegible]	[illegible]	[illegible]	[illegible]	[illegible]	[illegible]	[illegible]

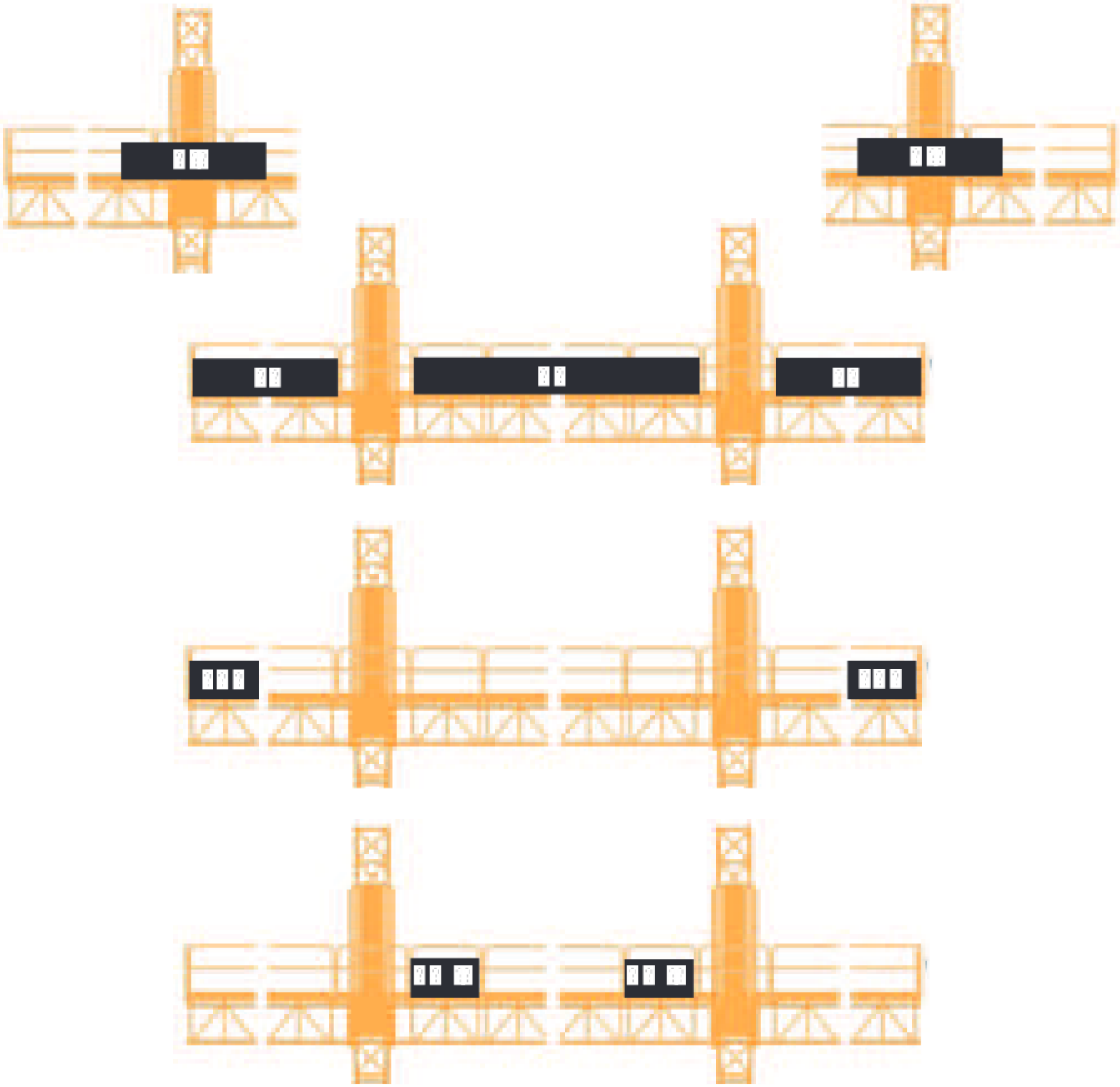
[illegible]

[illegible]				[illegible]			[illegible]			
[illegible]	[illegible]	[illegible]	[illegible]	[illegible]	[illegible]	[illegible]	[illegible]	[illegible]	[illegible]	[illegible]
[illegible]	[illegible]	[illegible]	[illegible]	[illegible]	[illegible]	[illegible]	[illegible]	[illegible]	[illegible]	[illegible]
[illegible]	[illegible]	[illegible]	[illegible]	[illegible]	[illegible]	[illegible]	[illegible]	[illegible]	[illegible]	[illegible]
[illegible]	[illegible]	[illegible]	[illegible]	[illegible]	[illegible]	[illegible]	[illegible]	[illegible]	[illegible]	[illegible]
[illegible]	[illegible]	[illegible]	[illegible]	[illegible]	[illegible]	[illegible]	[illegible]	[illegible]	[illegible]	[illegible]
[illegible]	[illegible]	[illegible]	[illegible]	[illegible]	[illegible]	[illegible]	[illegible]	[illegible]	[illegible]	[illegible]
[illegible]	[illegible]	[illegible]	[illegible]	[illegible]	[illegible]	[illegible]	[illegible]	[illegible]	[illegible]	[illegible]
[illegible]	[illegible]	[illegible]	[illegible]	[illegible]	[illegible]	[illegible]	[illegible]	[illegible]	[illegible]	[illegible]
[illegible]	[illegible]	[illegible]	[illegible]	[illegible]	[illegible]	[illegible]	[illegible]	[illegible]	[illegible]	[illegible]
[illegible]	[illegible]	[illegible]	[illegible]	[illegible]	[illegible]	[illegible]	[illegible]	[illegible]	[illegible]	[illegible]

[illegible]

cranelistings.com

? ???? ?? ???? ? ??? ?? ? ??????????????? ???? ????? ????? ???? ? ????? ?



?? ? ? ?? ??????????????? ???????? ????????
?? ? ? ?? ??????? ?????? ???????? ????????
? ? ??????? ??????
? ? ??????????????? ???????? ?????? ????? ????? ???????????????
?? ? ? ????? ?? ??????? ?????????? ????????????? ?? ???? ????
?? ? ? ??????? ?????????? ???????????
?? ?? ? ? ????? ?? ??????????? ????? ?? ? ??????? ?????? ?????????? ???????
???? ? ? ????? ?? ??????????? ????? ?? ?????? ?????????? ???????

??? ???? ?? ??? ?? ? ????????? ?????? ?? ??? ????? ??? ??? ? ??????? ????? ?? ?? ???? ?????? ??????? ???
?????????? ????????? ? ??? ??? ???????? ????????????? ?? ?????????

??? ? ???????? ? ?????? ????????? ?????? ??????? ?? ????? ????? ? ?? ?? ?????? ?? ??? ?????? ??????
? ???? ???? ?????????????? ????????????????????? ????? ?????? ?? ?? ?? ??? ?????

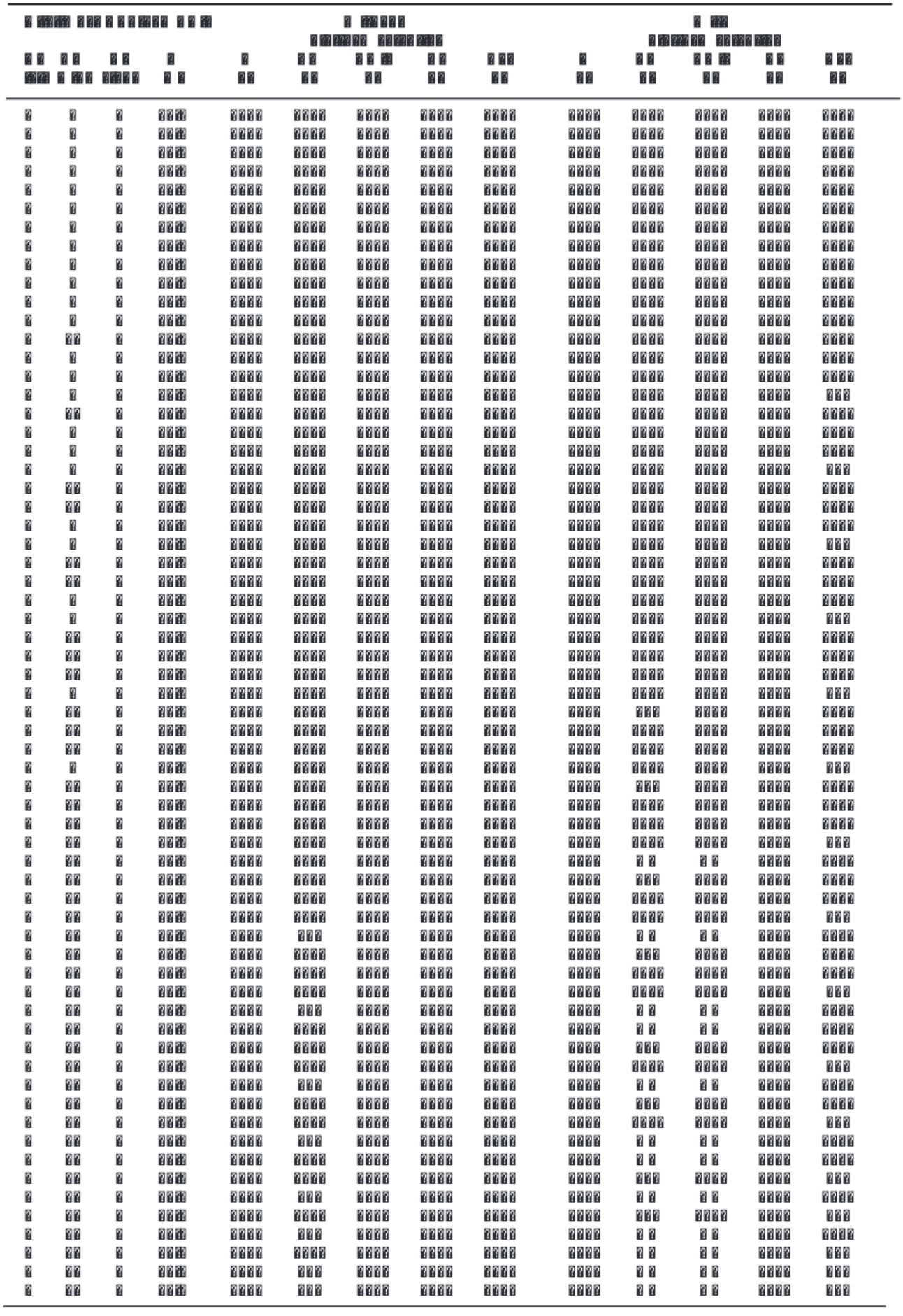
???? ??

cranelistings.com



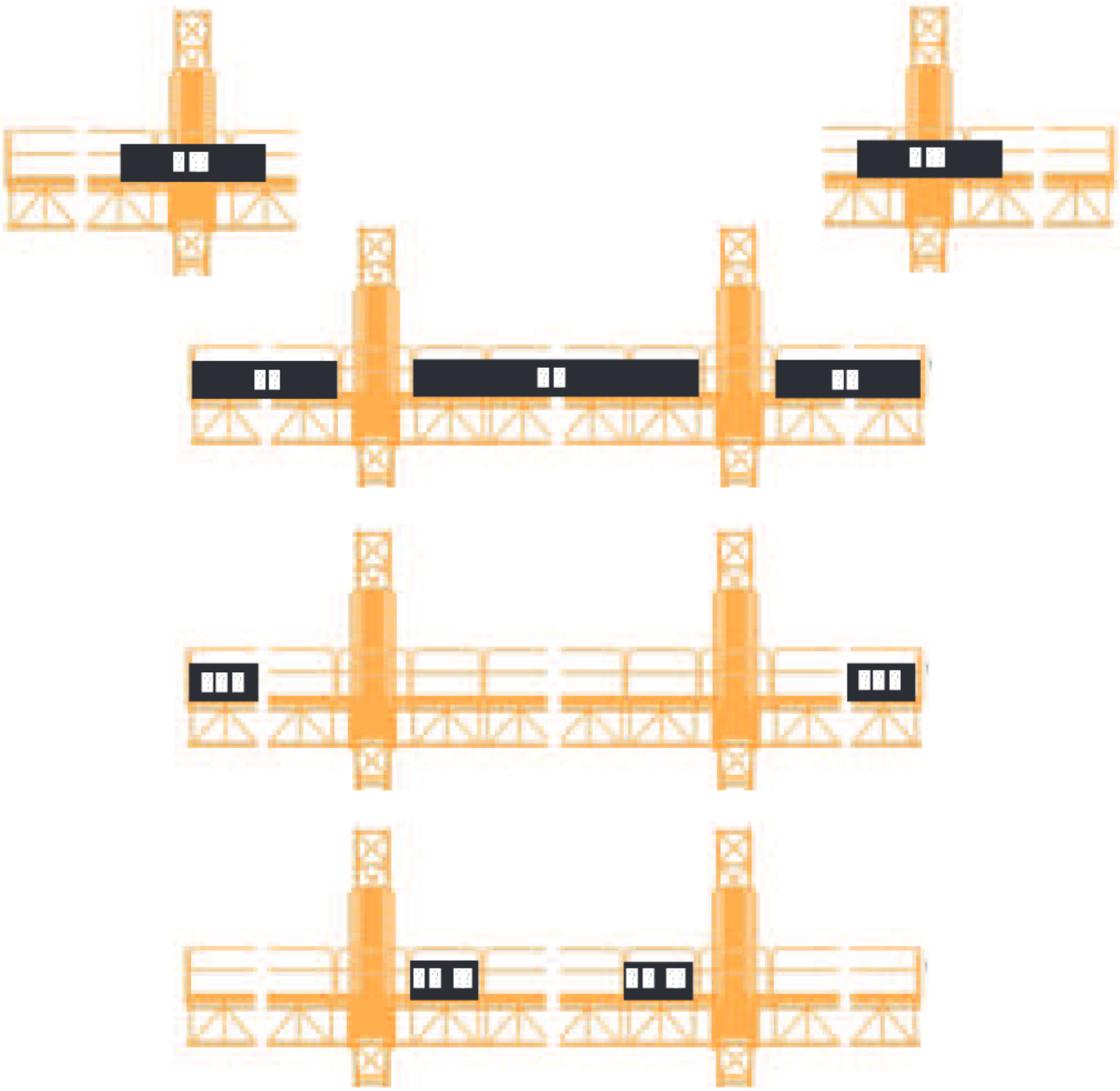






cranelistings.com

? ???? ?? ???? ? ??? ?? ? ??????????????? ???? ????? ????? ???? ? ????? ?



?? ? ? ?? ??????????????????? ????????
?? ? ? ?? ??????? ??????? ???????? ????????
? ? ??????? ??????
? ? ??????????????? ???????? ??????? ????? ????? ???????????????
?? ? ? ????? ?? ??????? ?????????? ????????????? ?? ???? ????
?? ? ? ??????? ?????????? ???????????
?? ?? ? ? ????? ?? ??????????? ????? ?? ? ??????? ??????? ?????????? ???????
???? ? ? ????? ?? ??????????? ????? ?? ??????? ?????????? ???????

??? ???? ?? ??? ?? ? ????????? ??????? ?? ???? ????? ???? ??? ? ??????? ????? ?? ?? ???? ?????? ??????? ???
?????????? ????????? ? ???? ??? ???????? ????????????? ?? ??????????

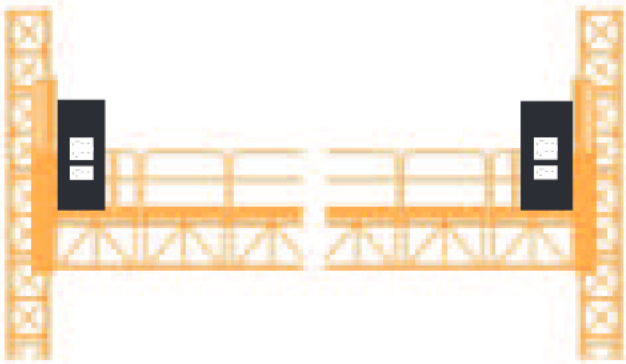
??? ?????? ? ??????? ??????? ?????? ??????? ?? ????? ?????? ? ?? ?? ?????? ?? ??? ?????? ??????
? ???? ???? ?????????? ????????????? ????? ??????? ?? ?? ?? ??? ?????

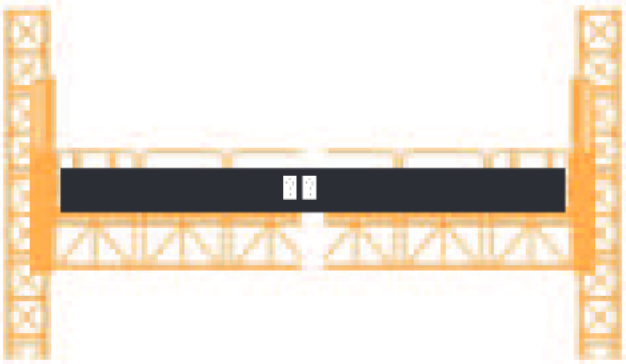
???? ??

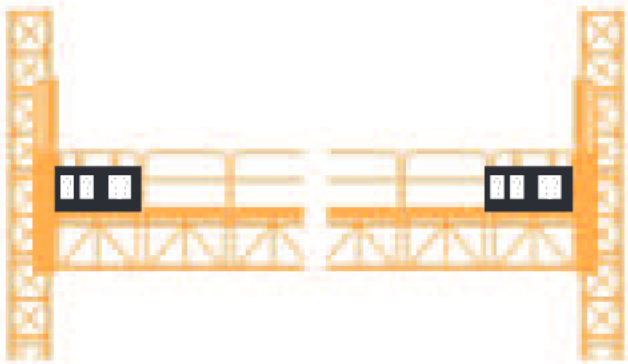
cranelistings.com



[illegible]	[illegible]	[illegible]	[illegible]	[illegible]	[illegible]	[illegible]	[illegible]	[illegible]	[illegible]	[illegible]	[illegible]	[illegible]	[illegible]
[illegible]	[illegible]	[illegible]	[illegible]	[illegible]	[illegible]	[illegible]	[illegible]	[illegible]	[illegible]	[illegible]	[illegible]	[illegible]	[illegible]







cranelistings.com

[illegible]

[illegible]	[illegible]	[illegible]	[illegible]	[illegible]	[illegible]	[illegible]	[illegible]	[illegible]	[illegible]	[illegible]	[illegible]	[illegible]	[illegible]	[illegible]
[illegible]	[illegible]	[illegible]	[illegible]	[illegible]	[illegible]	[illegible]	[illegible]	[illegible]	[illegible]	[illegible]	[illegible]	[illegible]	[illegible]	[illegible]
[illegible]	[illegible]	[illegible]	[illegible]	[illegible]	[illegible]	[illegible]	[illegible]	[illegible]	[illegible]	[illegible]	[illegible]	[illegible]	[illegible]	[illegible]
[illegible]	[illegible]	[illegible]	[illegible]	[illegible]	[illegible]	[illegible]	[illegible]	[illegible]	[illegible]	[illegible]	[illegible]	[illegible]	[illegible]	[illegible]
[illegible]	[illegible]	[illegible]	[illegible]	[illegible]	[illegible]	[illegible]	[illegible]	[illegible]	[illegible]	[illegible]	[illegible]	[illegible]	[illegible]	[illegible]
[illegible]	[illegible]	[illegible]	[illegible]	[illegible]	[illegible]	[illegible]	[illegible]	[illegible]	[illegible]	[illegible]	[illegible]	[illegible]	[illegible]	[illegible]
[illegible]	[illegible]	[illegible]	[illegible]	[illegible]	[illegible]	[illegible]	[illegible]	[illegible]	[illegible]	[illegible]	[illegible]	[illegible]	[illegible]	[illegible]
[illegible]	[illegible]	[illegible]	[illegible]	[illegible]	[illegible]	[illegible]	[illegible]	[illegible]	[illegible]	[illegible]	[illegible]	[illegible]	[illegible]	[illegible]
[illegible]	[illegible]	[illegible]	[illegible]	[illegible]	[illegible]	[illegible]	[illegible]	[illegible]	[illegible]	[illegible]	[illegible]	[illegible]	[illegible]	[illegible]
[illegible]	[illegible]	[illegible]	[illegible]	[illegible]	[illegible]	[illegible]	[illegible]	[illegible]	[illegible]	[illegible]	[illegible]	[illegible]	[illegible]	[illegible]
[illegible]	[illegible]	[illegible]	[illegible]	[illegible]	[illegible]	[illegible]	[illegible]	[illegible]	[illegible]	[illegible]	[illegible]	[illegible]	[illegible]	[illegible]
[illegible]	[illegible]	[illegible]	[illegible]	[illegible]	[illegible]	[illegible]	[illegible]	[illegible]	[illegible]	[illegible]	[illegible]	[illegible]	[illegible]	[illegible]
[illegible]	[illegible]	[illegible]	[illegible]	[illegible]	[illegible]	[illegible]	[illegible]	[illegible]	[illegible]	[illegible]	[illegible]	[illegible]	[illegible]	[illegible]
[illegible]	[illegible]	[illegible]	[illegible]	[illegible]	[illegible]	[illegible]	[illegible]	[illegible]	[illegible]	[illegible]	[illegible]	[illegible]	[illegible]	[illegible]
[illegible]	[illegible]	[illegible]	[illegible]	[illegible]	[illegible]	[illegible]	[illegible]	[illegible]	[illegible]	[illegible]	[illegible]	[illegible]	[illegible]	[illegible]
[illegible]	[illegible]	[illegible]	[illegible]	[illegible]	[illegible]	[illegible]	[illegible]	[illegible]	[illegible]	[illegible]	[illegible]	[illegible]	[illegible]	[illegible]
[illegible]	[illegible]	[illegible]	[illegible]	[illegible]	[illegible]	[illegible]	[illegible]	[illegible]	[illegible]	[illegible]	[illegible]	[illegible]	[illegible]	[illegible]

[illegible]

[illegible]	[illegible]	[illegible]	[illegible]	[illegible]	[illegible]	[illegible]	[illegible]	[illegible]	[illegible]	[illegible]	[illegible]	[illegible]	[illegible]	[illegible]
[illegible]	[illegible]	[illegible]	[illegible]	[illegible]	[illegible]	[illegible]	[illegible]	[illegible]	[illegible]	[illegible]	[illegible]	[illegible]	[illegible]	[illegible]
[illegible]	[illegible]	[illegible]	[illegible]	[illegible]	[illegible]	[illegible]	[illegible]	[illegible]	[illegible]	[illegible]	[illegible]	[illegible]	[illegible]	[illegible]
[illegible]	[illegible]	[illegible]	[illegible]	[illegible]	[illegible]	[illegible]	[illegible]	[illegible]	[illegible]	[illegible]	[illegible]	[illegible]	[illegible]	[illegible]
[illegible]	[illegible]	[illegible]	[illegible]	[illegible]	[illegible]	[illegible]	[illegible]	[illegible]	[illegible]	[illegible]	[illegible]	[illegible]	[illegible]	[illegible]
[illegible]	[illegible]	[illegible]	[illegible]	[illegible]	[illegible]	[illegible]	[illegible]	[illegible]	[illegible]	[illegible]	[illegible]	[illegible]	[illegible]	[illegible]
[illegible]	[illegible]	[illegible]	[illegible]	[illegible]	[illegible]	[illegible]	[illegible]	[illegible]	[illegible]	[illegible]	[illegible]	[illegible]	[illegible]	[illegible]
[illegible]	[illegible]	[illegible]	[illegible]	[illegible]	[illegible]	[illegible]	[illegible]	[illegible]	[illegible]	[illegible]	[illegible]	[illegible]	[illegible]	[illegible]
[illegible]	[illegible]	[illegible]	[illegible]	[illegible]	[illegible]	[illegible]	[illegible]	[illegible]	[illegible]	[illegible]	[illegible]	[illegible]	[illegible]	[illegible]
[illegible]	[illegible]	[illegible]	[illegible]	[illegible]	[illegible]	[illegible]	[illegible]	[illegible]	[illegible]	[illegible]	[illegible]	[illegible]	[illegible]	[illegible]
[illegible]	[illegible]	[illegible]	[illegible]	[illegible]	[illegible]	[illegible]	[illegible]	[illegible]	[illegible]	[illegible]	[illegible]	[illegible]	[illegible]	[illegible]
[illegible]	[illegible]	[illegible]	[illegible]	[illegible]	[illegible]	[illegible]	[illegible]	[illegible]	[illegible]	[illegible]	[illegible]	[illegible]	[illegible]	[illegible]
[illegible]	[illegible]	[illegible]	[illegible]	[illegible]	[illegible]	[illegible]	[illegible]	[illegible]	[illegible]	[illegible]	[illegible]	[illegible]	[illegible]	[illegible]
[illegible]	[illegible]	[illegible]	[illegible]	[illegible]	[illegible]	[illegible]	[illegible]	[illegible]	[illegible]	[illegible]	[illegible]	[illegible]	[illegible]	[illegible]
[illegible]	[illegible]	[illegible]	[illegible]	[illegible]	[illegible]	[illegible]	[illegible]	[illegible]	[illegible]	[illegible]	[illegible]	[illegible]	[illegible]	[illegible]
[illegible]	[illegible]	[illegible]	[illegible]	[illegible]	[illegible]	[illegible]	[illegible]	[illegible]	[illegible]	[illegible]	[illegible]	[illegible]	[illegible]	[illegible]
[illegible]	[illegible]	[illegible]	[illegible]	[illegible]	[illegible]	[illegible]	[illegible]	[illegible]	[illegible]	[illegible]	[illegible]	[illegible]	[illegible]	[illegible]
[illegible]	[illegible]	[illegible]	[illegible]	[illegible]	[illegible]	[illegible]	[illegible]	[illegible]	[illegible]	[illegible]	[illegible]	[illegible]	[illegible]	[illegible]
[illegible]	[illegible]	[illegible]	[illegible]	[illegible]	[illegible]	[illegible]	[illegible]	[illegible]	[illegible]	[illegible]	[illegible]	[illegible]	[illegible]	[illegible]

[illegible]

cranelistings.com

? ???? ?? ?????? ??????? ????? ?? ?? ??? ? ??? ? ???????

? ??? ????? ????????? ?? ???? ?????? ??? ??? ??? ?? ??????? ????? ?? ?? ??? ??????? ???

? ?????? ? ???????????? ? ?? ? ???
? ?? ?? ? ????????????? ? ????? ???

?????? ? ??????????

? ? ???? ?? ?? ????? ??? ??????? ??? ?????? ?? ?? ??? ??????? ????????? ??????? ???? ? ?? ???????? ?? ??? ?? ????? ?? ??? ??? ?? ?? ??? ?? ????? ?? ?????????? ??????? ????????? ?? ? ????

?? ?? ? ?????? ????????

? ? ???? ?? ?? ??? ??? ??????? ??? ?????? ?? ?? ??? ??????? ????????? ??????? ???? ? ??? ?? ??? ???????? ?? ??? ?? ????? ?? ??? ??? ?? ?? ??? ?? ????? ?? ??? ?????? ????????? ????? ????

? ???? ?? ? ??? ? ???????? ? ??? ?????? ?? ? ???

? ???? ????? ?? ? ??? ???????? ?? ??? ???????? ?????? ?? ????? ?????? ?? ???????? ?? ??? ? ????????? ??????

?? ?? ????? ?? ??? ????? ???????? ??
?? ?? ????? ?? ??? ??? ?????????????? ????????? ???????

? ???? ???? ? ? ??? ? ?? ? ?? ??? ?? ? ?????

? ??? ? ??? ? ??????? ? ?? ?? ????? ???? ????????? ?? ? ?????? ???????? ??????? ??? ?????? ??? ??????????????

?? ???????? ? ????? ?? ? ??? ?????? ???? ? ??????? ? ???

? ?? ?? ??????? ? ???? ?? ? ??? ?????? ?? ? ?????? ??? ? ??? ????????? ? ??? ? ????????????? ?? ?? ????? ??? ? ??? ? ??????

cranelistings.com

[illegible]

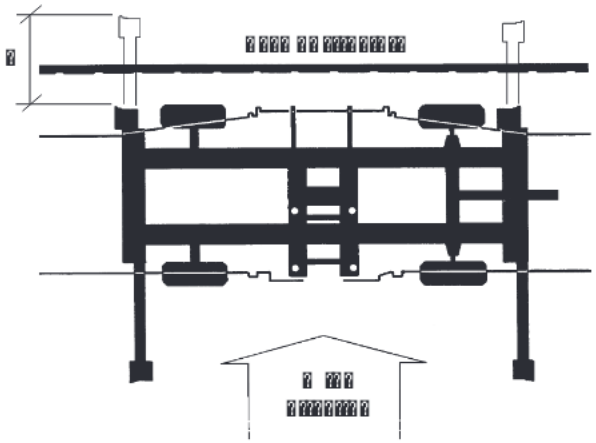
[illegible]

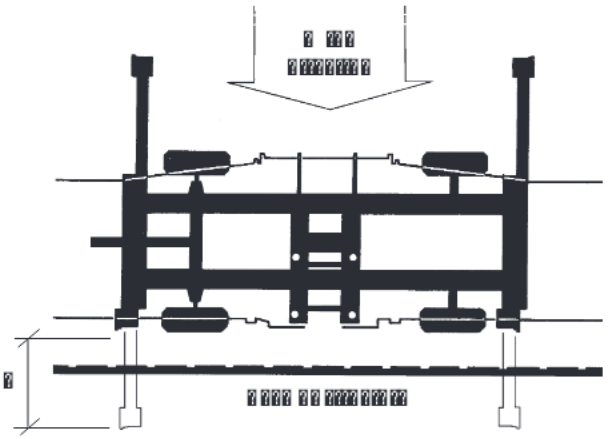
[illegible]

[illegible]	[illegible]	[illegible]
[illegible]	[illegible]	[illegible]
[illegible]	[illegible]	[illegible]
[illegible]	[illegible]	[illegible]
[illegible]	[illegible]	[illegible]
[illegible]	[illegible]	[illegible]

[illegible]

[illegible]	[illegible]	[illegible]
[illegible]	[illegible]	[illegible]
[illegible]	[illegible]	[illegible]
[illegible]	[illegible]	[illegible]
[illegible]	[illegible]	[illegible]
[illegible]	[illegible]	[illegible]





[illegible]	[illegible]	[illegible]
[illegible]	[illegible]	[illegible]
[illegible]	[illegible]	[illegible]
[illegible]	[illegible]	[illegible]
[illegible]	[illegible]	[illegible]
[illegible]	[illegible]	[illegible]

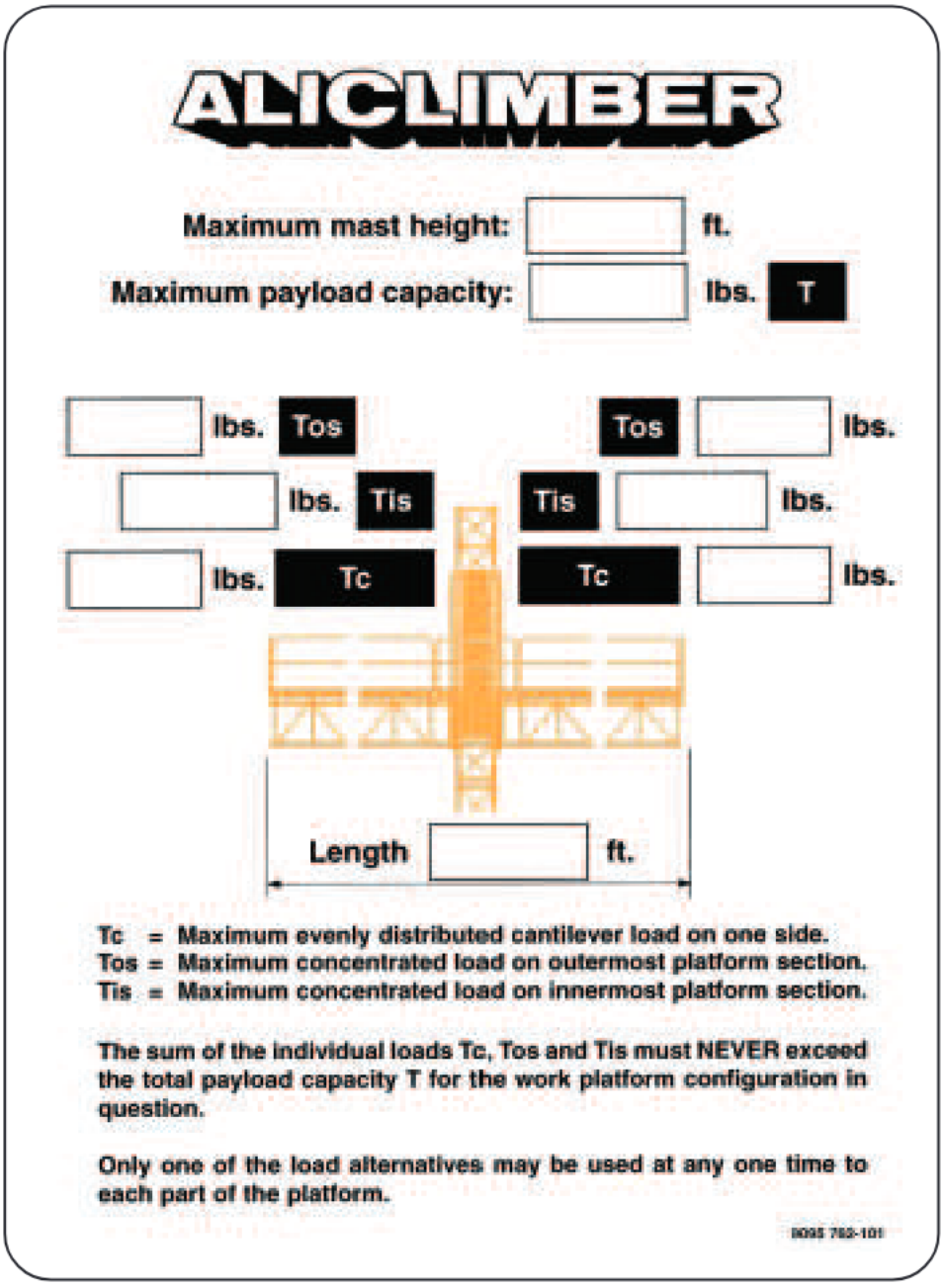
cranelistings.com

[illegible]

[illegible]

[illegible]

[illegible]

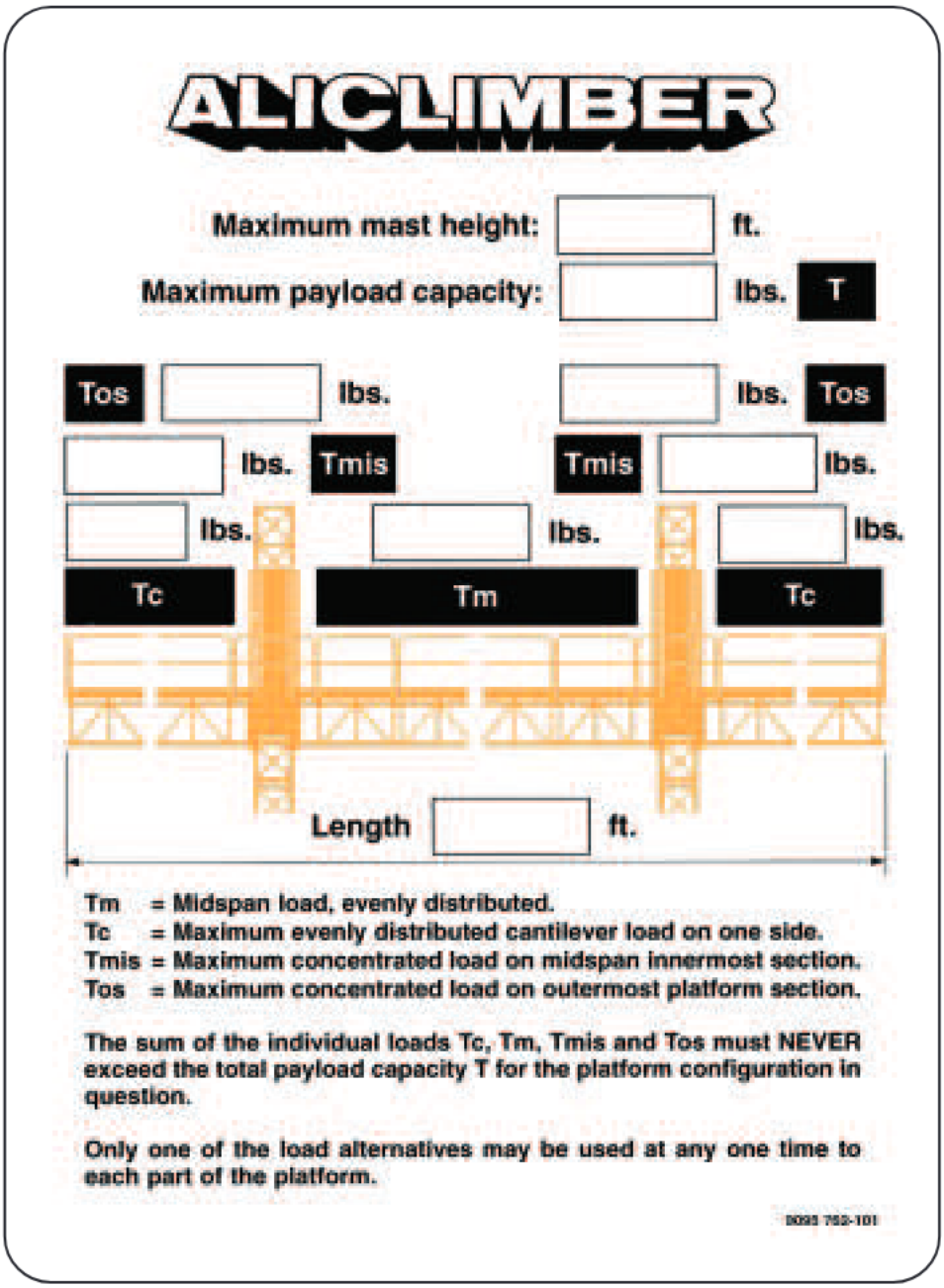


[illegible]

cranelistings.com

[illegible]

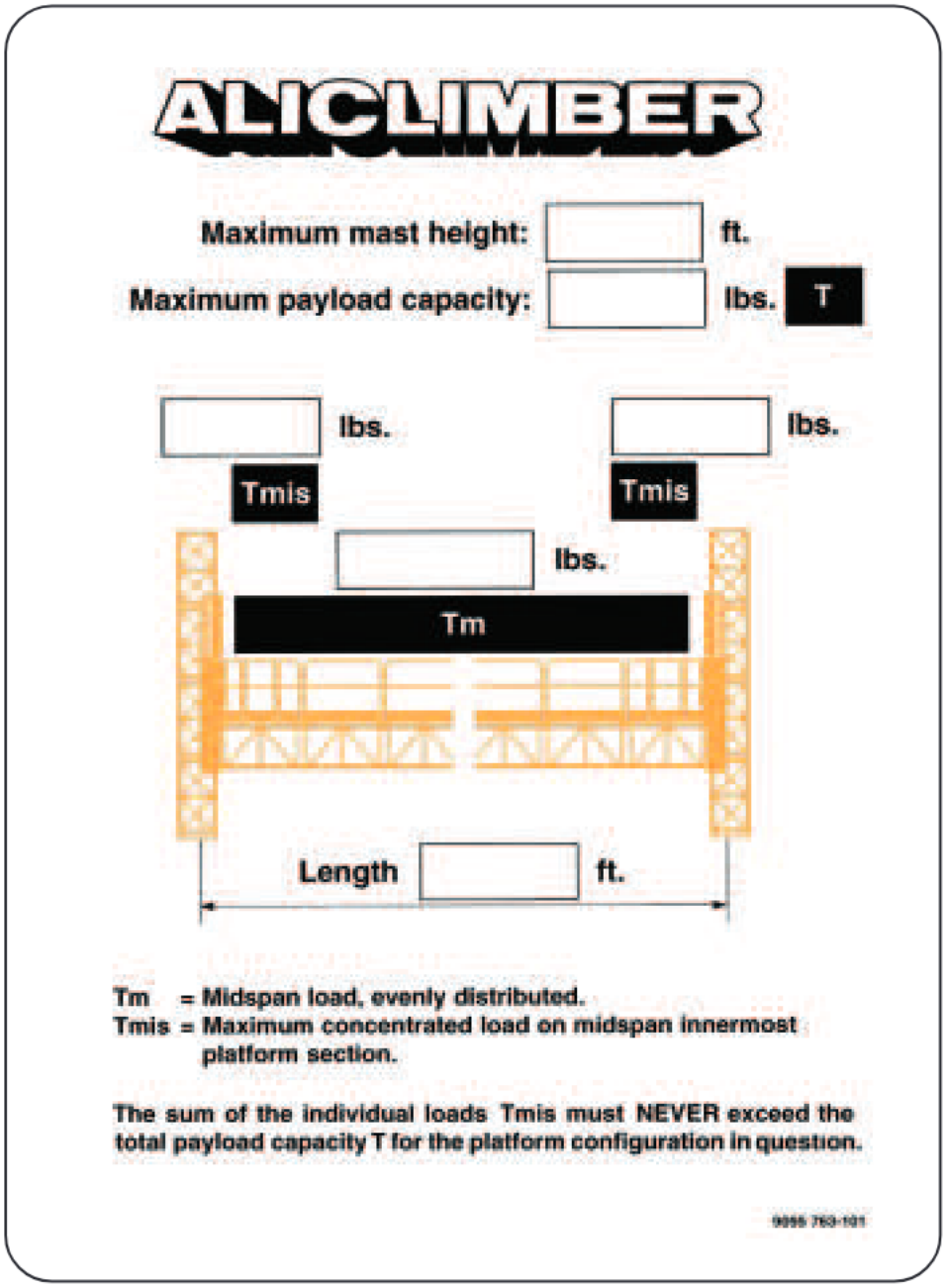
[illegible]



[illegible]

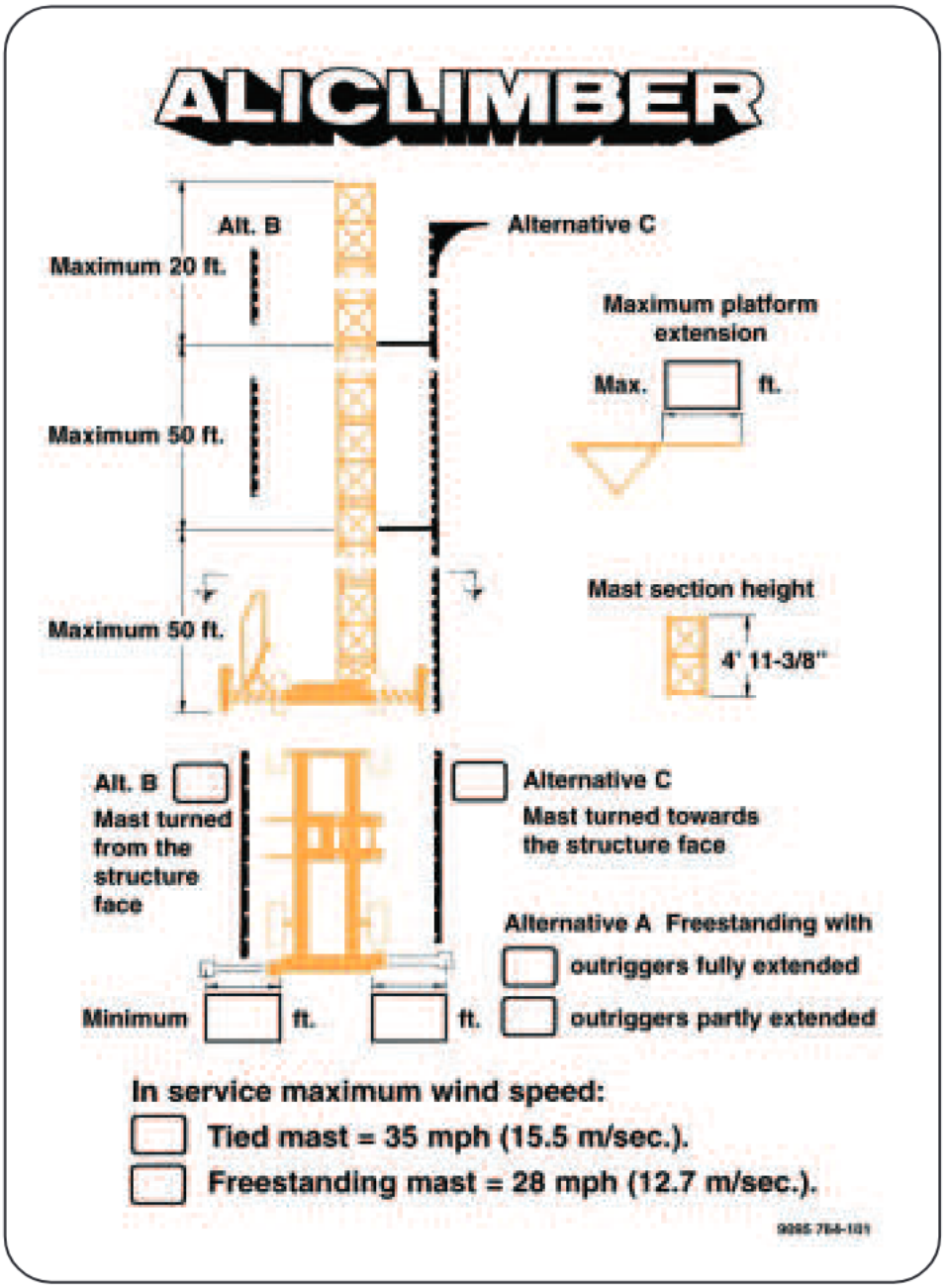
cranelistings.com

[illegible]



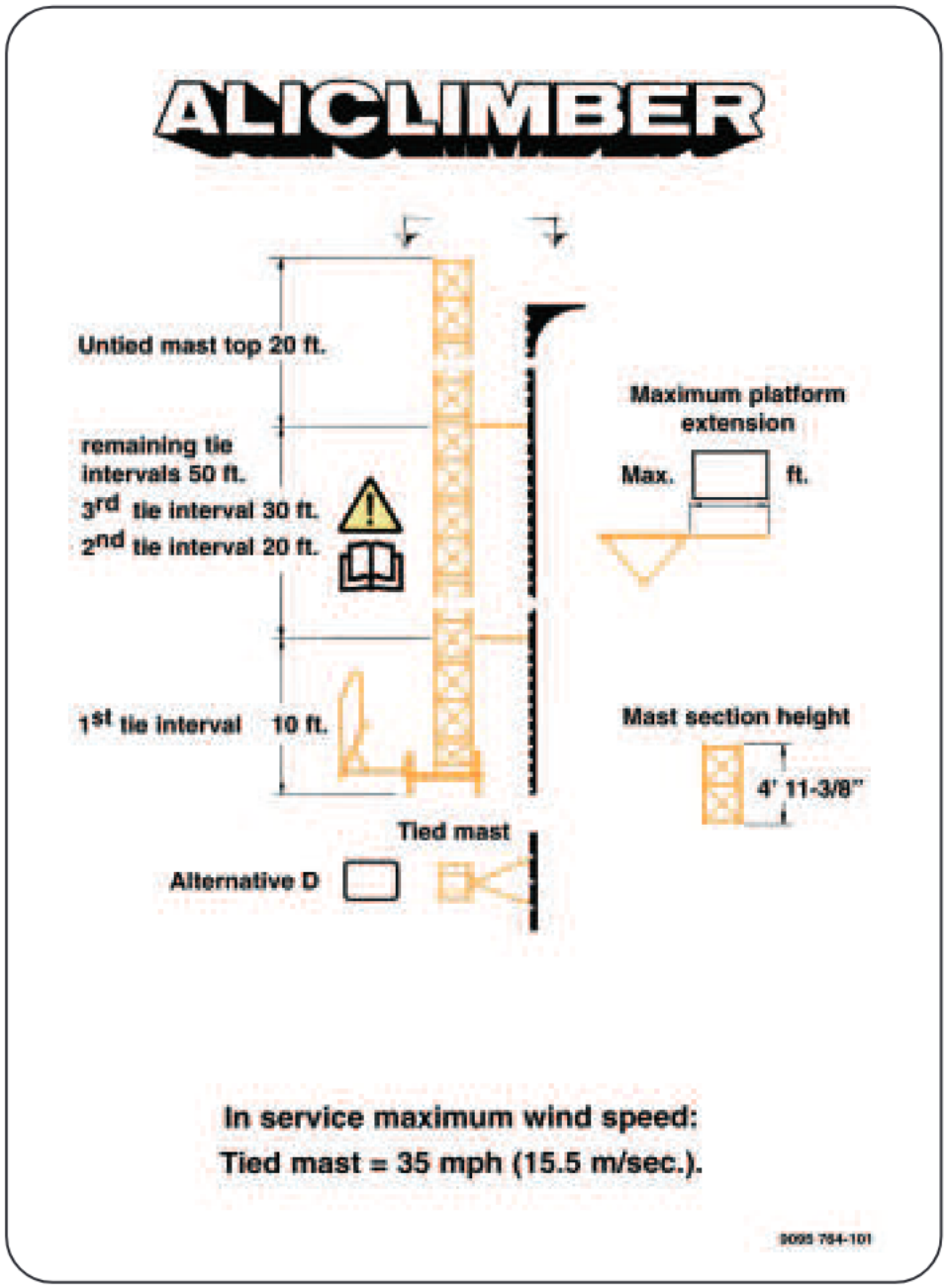
cranelistings.com

[illegible]



cranelistings.com

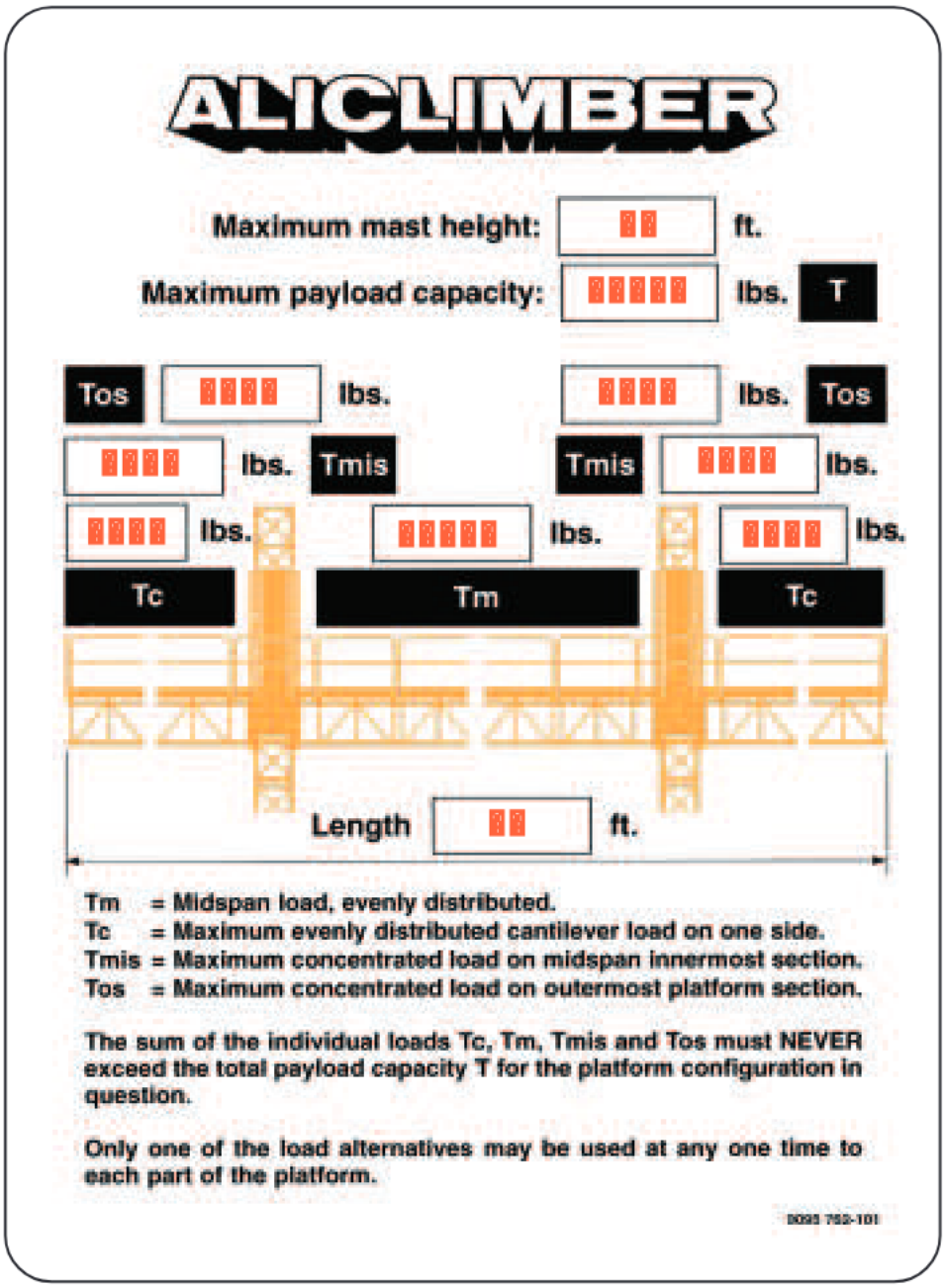
[illegible]



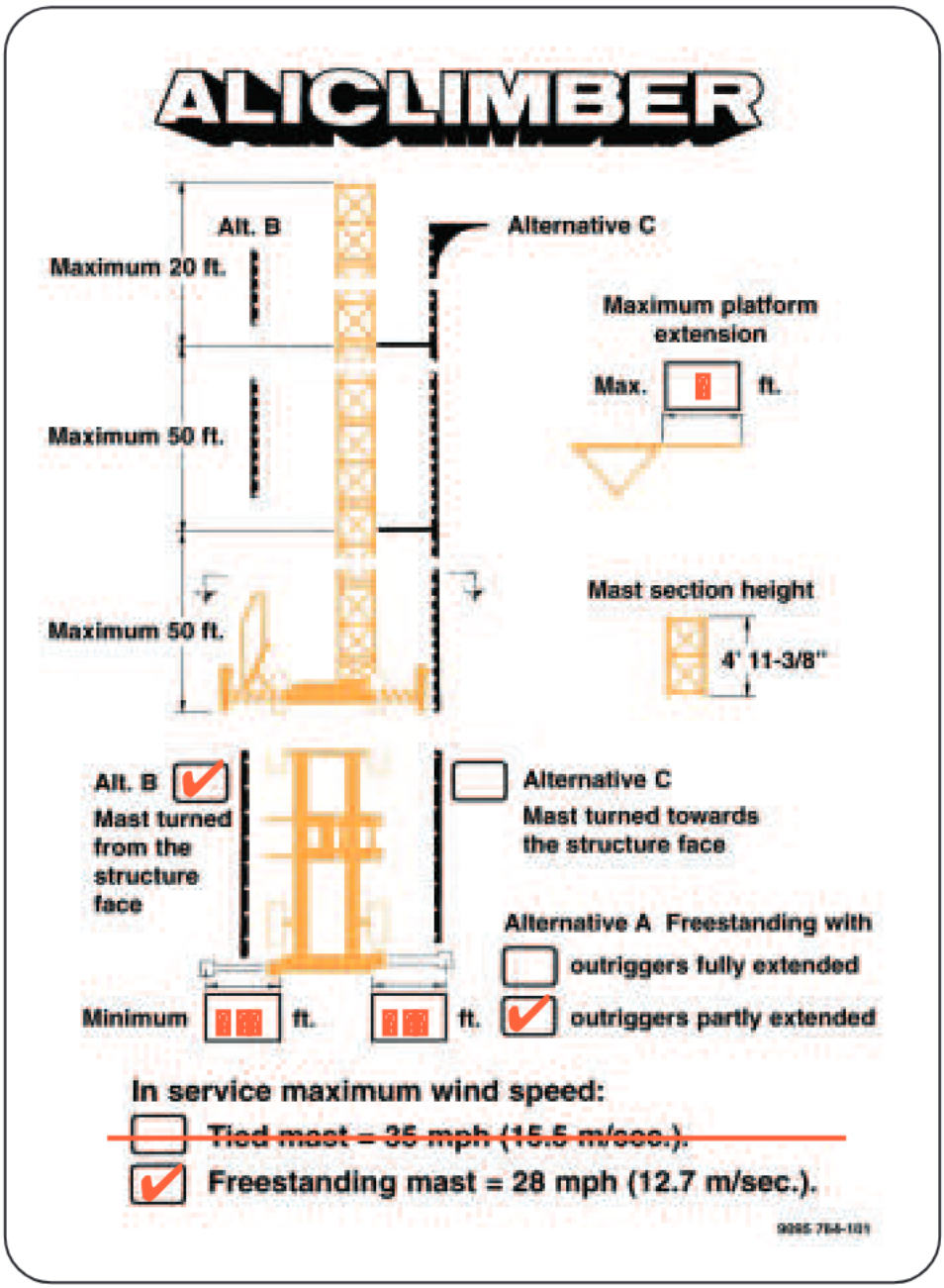
cranelistings.com

[illegible]

[illegible]



cranelistings.com



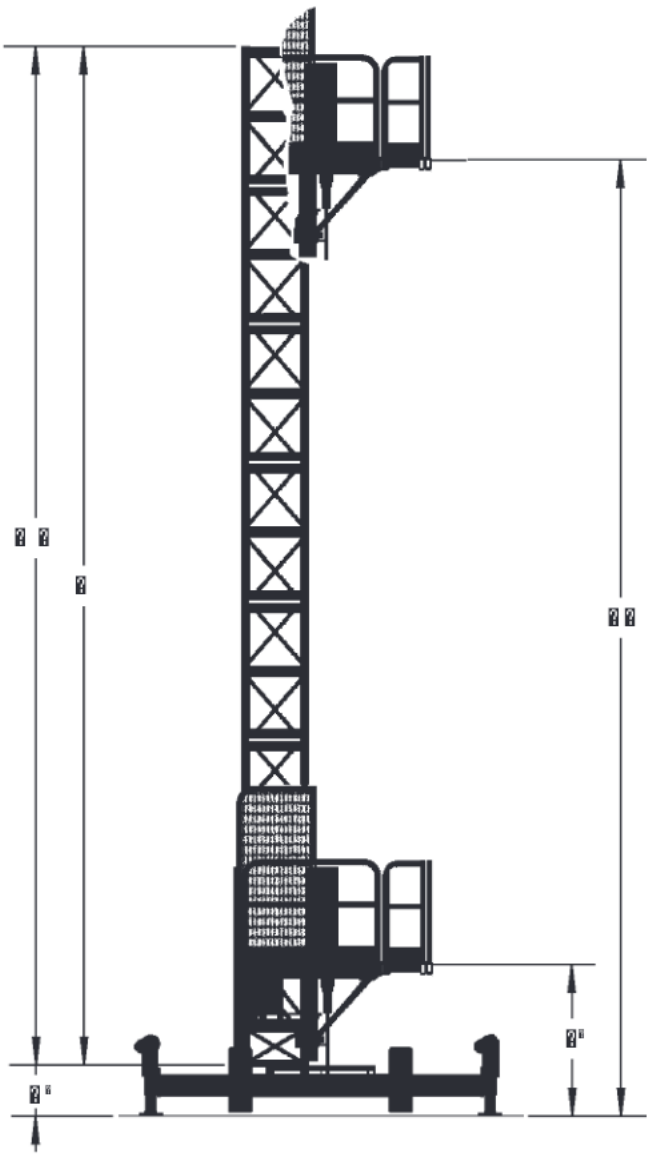
cranelistings.com

[illegible]

[illegible]

[illegible]	[illegible]	[illegible]
[illegible]	[illegible]	[illegible]
[illegible]	[illegible]	[illegible]
[illegible]	[illegible]	[illegible]
[illegible]	[illegible]	[illegible]

[illegible]	[illegible]	[illegible]
[illegible]	[illegible]	[illegible]
[illegible]	[illegible]	[illegible]

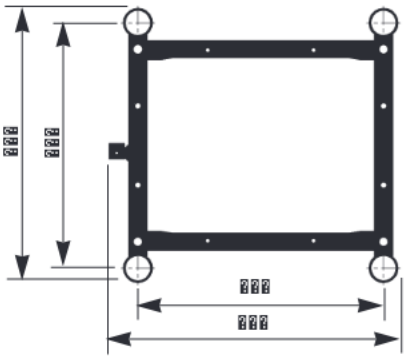


[illegible]

cranelistings.com

? ??? ? ? ???

? ?????????????? ????? ? ? ?? ?????? ??? ???
? ??????? ???? ????? ?? ????? ????? ?? ????
? ??????????? ???????? ???? ? ? ? ???????? ? ???? ?? ???
??? ?????
? ????????? ???????? ???? ? ? ????? ????? ????



????

? ???? ??????? ??????? ??????? ????????

? ??? ????????? ????????? ??? ??? ? ???? ??? ? ? ?? ???
??????? ?? ???? ???????? ?? ??????? ??????? ??? ??

? ???? ??????? ??????? ??????? ????

? ????????? ?????????? ????

? ???? ????? ?? ?? ?? ??

cranelistings.com

[illegible] [illegible] [illegible] [

? ??????? ?????????????????? ????

? ??? ? ??????? ????

??? ?????? ????? ?? ???? ? ?????? ? ??? ?? ??????? ????? ? ??? ????? ??? ? ??????? ????? ???? ?????? ?????????????? ?????????? ??????? ?????????????? ? ??? ????????? ?????????? ? ??? ????????? ????? ?????? ?? ???? ? ??????? ????? ??? ??????? ??? ??? ??????????????????? ??? ?????????? ??? ????????? ?? ??? ? ??? ?? ? ??? ??????? ? ??????? ????? ? ??? ????? ?????? ????????? ?? ??? ?????? ?????????? ?? ??? ??? ??????? ??? ???? ????????? ?????????? ? ??? ? ????? ??? ???? ? ??? ??????? ? ??? ?? ???????? ?????????????????? ?? ??? ??? ??? ????????? ?? ??? ?????? ????? ??????? ???? ???? ?????????????? ?? ????? ???????

? ??????????? ???????

??? ????? ? ??? ????? ????? ? ??????????? ?????????? ?? ????????????? ???????? ??? ? ??????????? ?? ??? ? ??? ?? ??????? ?? ?????????????? ? ??? ??? ???? ?????????? ? ?????? ??? ? ??? ??? ? ?????????????? ????? ? ????????????

? ???????? ???????

? ???????? ? ????? ??????? ?? ?????????? ?? ??????? ? ? ??? ?? ??????? ????? ?????? ?????????? ??????? ???? ? ??? ?? ????????? ? ????? ? ??? ?? ????????? ? ??? ?????????? ???? ????????? ???? ??????? ?? ??? ????????? ?? ???? ?????????? ? ?????? ?????? ????????? ??? ? ??? ?? ???????? ?

? ???????????

??? ????? ?????? ?? ?????????? ??? ??? ????????? ????? ??????? ?? ??? ? ????? ?? ??? ? ??? ?? ???????? ????? ?? ??? ?? ?????????? ????? ???????? ?????? ?? ?? ?? ????? ????? ?? ???????????? ?????? ??? ????????? ?? ? ????????? ??????? ?? ??????? ??? ???? ??? ???????? ????????? ???? ?????? ??? ? ??? ?? ???????? ? ????? ? ??????? ? ??????? ??? ??? ??????? ?? ??? ???????? ??????? ??? ?????

? ?????? ?????????

? ?????? ?????????? ?? ????????? ?? ???????? ? ? ??? ?? ???????? ? ??? ????? ??????????????? ??????? ????????? ?????????

- ? ????? ?????????? ?? ? ????????? ??????? ?? ??? ???????? ???????? ??? ???????? ?? ????? ????????
- ? ???? ????? ??? ?????????? ??? ?????? ? ??????????? ????????? ?? ???? ??????? ?????? ????????? ?? ? ????????? ??????? ?? ??? ???????? ?? ??? ? ??????????? ????????? ?? ???? ??????? ?????? ??????

cranelistings.com

- ▒▒▒▒▒▒▒▒▒▒ ▒▒▒ ▒▒▒▒▒▒▒ ▒ ▒▒▒▒▒▒▒▒ ▒▒▒ ▒▒▒▒▒▒▒▒▒▒▒ ▒▒▒▒▒ ▒▒▒▒▒▒▒▒▒ ▒▒ ▒▒▒ ▒ ▒▒▒ ▒▒ ▒▒▒▒▒▒▒ ▒
- ▒▒▒▒▒▒ ▒▒▒▒ ▒▒▒▒ ▒▒▒ ▒▒▒▒▒▒▒▒ ▒▒▒ ▒ ▒▒▒▒ ▒▒▒ ▒ ▒▒▒ ▒▒ ▒▒▒▒▒▒▒ ▒▒ ▒▒ ▒▒ ▒▒▒▒ ▒▒ ▒ ▒▒▒▒▒ ▒▒▒ ▒▒▒▒▒▒ ▒▒ ▒▒▒ ▒▒▒▒▒▒▒▒ ▒▒▒▒▒▒▒▒▒▒▒▒ ▒▒▒▒▒▒▒ ▒▒ ▒▒▒ ▒ ▒▒▒▒▒▒▒▒▒▒▒▒

▒ ▒▒▒▒▒▒▒ ▒ ▒▒▒▒▒▒▒ ▒▒▒▒

▒▒▒ ▒▒▒▒▒▒ ▒▒▒▒▒ ▒▒ ▒▒▒▒ ▒▒▒▒▒▒▒▒▒▒▒ ▒ ▒▒▒▒▒▒ ▒ ▒▒▒ ▒▒ ▒▒▒▒▒ ▒▒▒▒ ▒▒▒▒▒ ▒▒ ▒▒▒▒▒ ▒▒▒▒▒▒▒ ▒▒▒▒ ▒▒▒▒ ▒▒▒▒▒▒ ▒▒▒▒▒▒▒▒▒▒▒▒ ▒▒▒▒ ▒▒▒▒▒▒▒▒ ▒▒ ▒▒▒▒▒▒▒▒▒▒▒ ▒▒▒▒▒ ▒▒▒▒▒▒▒▒▒▒▒ ▒▒▒▒▒ ▒▒▒ ▒▒▒▒▒▒▒▒▒ ▒▒▒ ▒▒▒▒▒▒ ▒▒▒▒▒▒▒▒ ▒▒▒▒▒▒▒▒▒▒ ▒▒ ▒▒▒ ▒▒▒▒▒▒▒▒▒▒ ▒▒▒▒ ▒▒▒▒▒▒▒▒▒ ▒ ▒▒▒▒ ▒ ▒▒▒▒ ▒▒▒▒▒▒▒▒▒▒ ▒▒ ▒▒▒ ▒▒▒▒ ▒▒▒ ▒▒▒▒▒▒▒▒▒ ▒▒ ▒▒▒ ▒ ▒▒▒ ▒▒ ▒▒▒▒▒▒▒▒ ▒▒▒ ▒▒▒ ▒▒▒▒▒▒▒▒▒▒▒▒▒▒▒ ▒▒▒▒▒ ▒▒▒ ▒▒▒ ▒ ▒▒▒▒▒▒ ▒▒ ▒ ▒▒▒ ▒▒ ▒▒▒ ▒▒▒▒▒▒ ▒▒ ▒▒▒▒▒ ▒▒▒▒▒▒▒▒▒▒▒▒ ▒▒▒▒ ▒▒▒▒▒▒ ▒▒▒ ▒▒▒▒▒▒▒▒ ▒▒ ▒▒▒▒▒▒▒▒▒▒▒▒▒ ▒▒▒▒▒ ▒▒▒▒▒▒▒▒▒▒

▒▒▒▒▒▒▒▒▒▒ ▒ ▒▒▒▒▒▒

▒▒▒ ▒▒▒▒▒▒▒▒ ▒▒▒▒▒ ▒▒ ▒▒ ▒▒▒ ▒▒▒▒ ▒▒▒ ▒▒▒▒▒▒▒▒▒▒ ▒ ▒▒▒▒▒▒ ▒▒ ▒▒▒▒▒▒ ▒▒ ▒▒▒ ▒ ▒▒▒ ▒▒ ▒▒▒▒▒▒▒▒ ▒▒▒ ▒▒▒ ▒▒▒▒▒▒▒▒ ▒ ▒▒▒▒ ▒▒ ▒▒ ▒▒▒▒▒▒▒▒▒▒▒ ▒▒▒▒▒▒▒▒ ▒▒▒▒▒▒▒▒▒ ▒▒▒ ▒▒▒▒▒▒▒▒ ▒▒▒ ▒ ▒▒▒▒▒▒ ▒ ▒▒▒▒ ▒▒▒▒▒▒▒▒▒▒ ▒▒▒▒▒ ▒ ▒▒▒ ▒▒▒▒▒▒▒▒ ▒▒ ▒▒▒ ▒ ▒▒▒ ▒▒ ▒▒▒▒▒▒▒▒ ▒

▒▒▒▒▒▒▒

▒▒▒ ▒▒▒▒▒▒▒▒ ▒▒▒▒▒ ▒▒▒▒▒ ▒▒▒▒▒ ▒▒▒▒▒▒▒ ▒▒▒▒▒▒ ▒▒ ▒▒▒ ▒▒▒ ▒ ▒ ▒▒▒▒▒ ▒▒ ▒ ▒ ▒▒▒ ▒▒ ▒▒▒▒▒▒▒▒ ▒▒ ▒▒▒ ▒▒▒▒▒▒ ▒▒▒▒▒▒▒▒▒ ▒▒▒▒▒▒▒▒▒▒▒▒▒▒▒ ▒▒▒ ▒▒▒▒▒▒▒▒ ▒▒▒▒▒▒▒▒▒▒▒ ▒ ▒▒▒ ▒▒▒ ▒▒▒ ▒▒ ▒▒ ▒▒▒▒▒ ▒▒▒▒▒▒ ▒▒▒▒▒▒ ▒ ▒▒▒ ▒▒▒▒ ▒▒▒▒▒▒▒▒▒▒ ▒▒▒▒ ▒▒▒▒▒▒▒▒ ▒▒▒▒▒▒▒ ▒▒▒▒▒ ▒▒▒▒▒▒▒ ▒▒▒ ▒ ▒▒▒ ▒▒ ▒▒▒▒▒▒▒▒ ▒▒ ▒▒▒▒▒ ▒▒▒▒▒ ▒▒ ▒▒▒▒▒▒▒▒▒▒▒▒▒▒▒ ▒▒▒▒▒▒ ▒▒▒ ▒ ▒▒▒ ▒▒ ▒▒▒▒▒▒▒ ▒ ▒ ▒▒▒ ▒▒▒▒▒▒▒▒▒▒ ▒▒▒▒▒▒▒▒ ▒▒▒▒▒▒▒ ▒▒▒▒▒▒▒▒▒▒ ▒▒▒▒▒ ▒▒▒▒▒ ▒▒ ▒▒▒▒▒▒▒▒ ▒▒▒ ▒ ▒▒▒ ▒▒ ▒▒▒▒▒▒▒ ▒

▒ ▒▒▒▒▒ ▒▒▒▒▒▒▒▒▒

▒ ▒▒▒▒▒ ▒▒▒▒▒ ▒▒▒▒▒▒▒▒▒▒ ▒▒ ▒▒▒▒▒▒▒▒ ▒▒▒ ▒ ▒▒▒ ▒▒ ▒▒▒▒▒▒▒▒ ▒ ▒▒▒ ▒▒▒▒▒▒▒▒▒ ▒▒▒▒▒▒▒▒▒▒▒▒▒▒

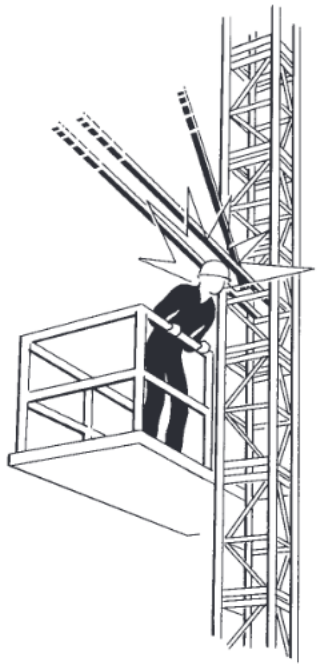
- ▒▒▒▒▒ ▒▒▒▒▒▒▒▒▒▒ ▒▒ ▒ ▒▒▒▒▒▒▒▒▒ ▒▒▒▒▒▒▒ ▒▒ ▒▒▒ ▒▒▒▒▒▒▒▒▒ ▒▒▒▒▒▒▒▒ ▒▒▒ ▒▒▒▒▒▒▒▒ ▒▒ ▒▒▒▒▒ ▒▒ ▒▒▒ ▒▒▒▒▒▒▒▒
- ▒▒▒▒▒ ▒▒▒ ▒▒▒▒▒▒▒▒▒▒▒ ▒▒▒ ▒ ▒▒▒▒▒▒▒▒▒▒▒▒▒▒▒▒▒ ▒▒▒▒▒▒ ▒▒▒▒▒▒▒▒▒▒ ▒▒▒▒▒▒▒▒▒▒▒▒ ▒▒▒ ▒▒▒▒▒▒▒ ▒▒▒▒▒▒▒▒ ▒▒ ▒▒▒▒▒ ▒▒▒▒▒▒▒▒ ▒▒ ▒ ▒▒▒▒▒▒▒▒▒▒ ▒▒▒▒▒▒▒ ▒▒ ▒▒▒ ▒▒▒▒▒▒▒▒▒ ▒▒ ▒▒▒ ▒ ▒▒▒▒▒▒▒▒▒▒▒▒▒▒▒▒▒ ▒▒▒▒▒▒ ▒▒▒▒▒▒▒▒▒▒ ▒▒▒▒▒▒▒▒▒▒▒▒▒▒▒ ▒▒▒▒▒▒▒ ▒▒▒▒▒▒
- ▒▒▒▒▒▒▒▒▒▒▒ ▒▒ ▒▒▒▒▒▒▒▒ ▒▒ ▒▒▒▒▒▒▒ ▒ ▒▒▒▒▒▒▒▒▒ ▒▒▒▒▒▒▒ ▒▒▒▒▒▒▒▒ ▒▒▒▒▒▒▒▒▒▒▒ ▒▒▒▒▒▒▒▒▒▒▒▒▒▒▒ ▒▒▒▒▒▒ ▒▒▒▒▒▒▒▒▒▒▒ ▒▒▒▒▒▒ ▒▒▒▒▒▒▒▒▒▒ ▒▒ ▒▒▒ ▒ ▒▒▒ ▒▒ ▒▒▒▒▒▒▒▒ ▒

cranelistings.com

[illegible]

[illegible]

[illegible]



[illegible]

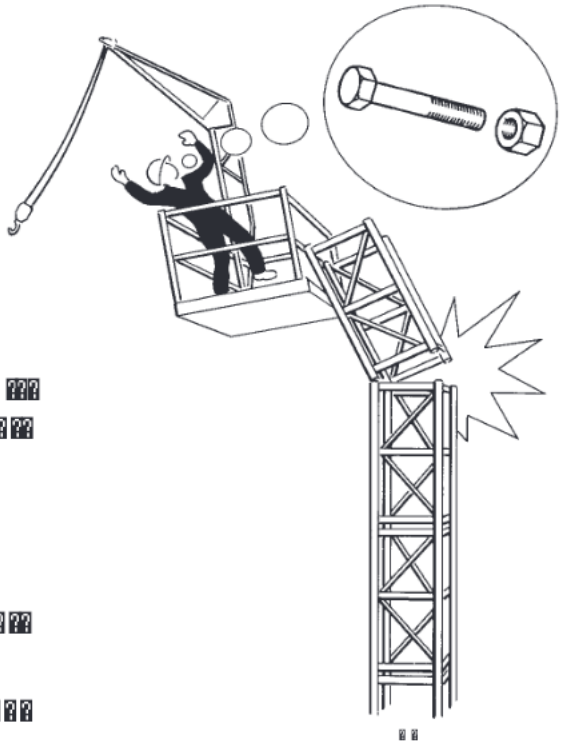
[illegible]

[illegible]

[illegible]

[illegible]

[illegible]



[illegible]

[illegible]

[illegible]

[illegible]

[illegible]

[illegible]

[illegible]

[illegible]

[illegible]

[illegible]

cranelistings.com

[illegible]

- [illegible]
- [illegible]

[illegible]

- [illegible]
- [illegible]
- [illegible]
- [illegible]
- [illegible]
- [illegible]
- [illegible]

[illegible]

- [illegible]
- [illegible]
- [illegible]

[illegible]

- [illegible]
- [illegible]
- [illegible]

[illegible]



[illegible]

[illegible]

- [illegible]

cranelistings.com

[redacted]

[redacted]

[redacted]	[redacted]	[redacted]
[redacted]	[redacted]	[redacted]
[redacted]	[redacted]	[redacted]
[redacted]	[redacted]	[redacted]
[redacted]	[redacted]	[redacted]
[redacted]	[redacted]	[redacted]
[redacted]	[redacted]	[redacted]
[redacted]	[redacted]	[redacted]

[redacted]

[redacted]

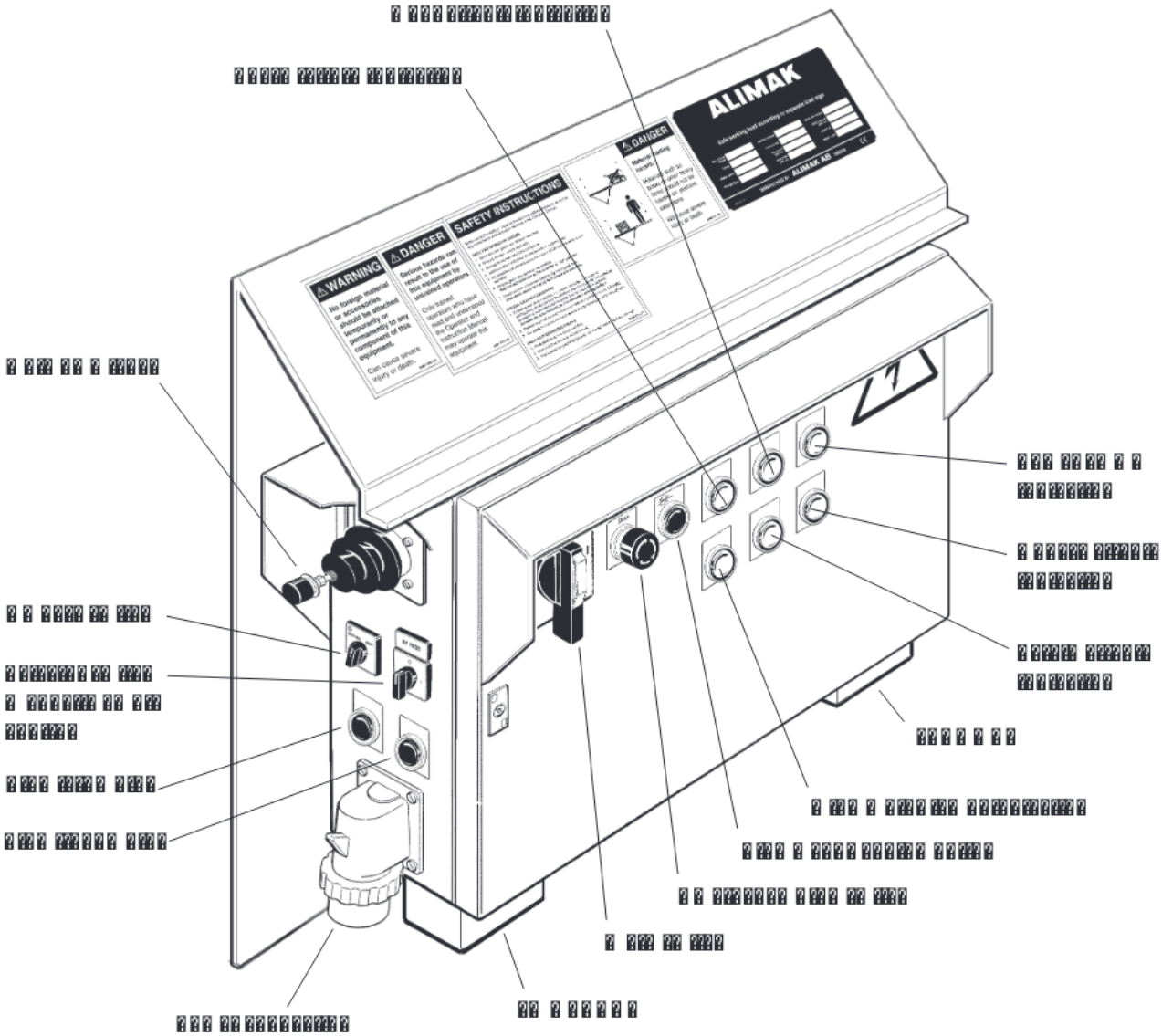
[redacted]

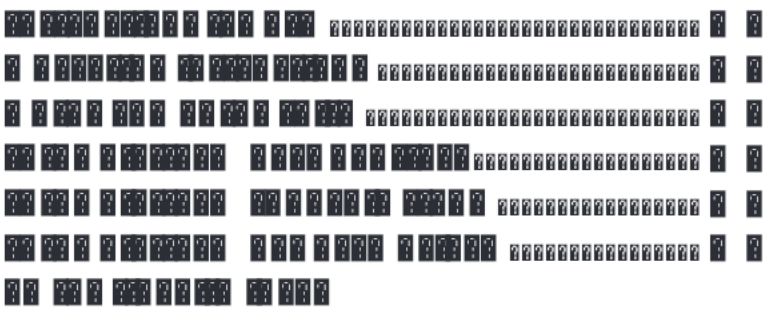
[redacted]

[redacted]

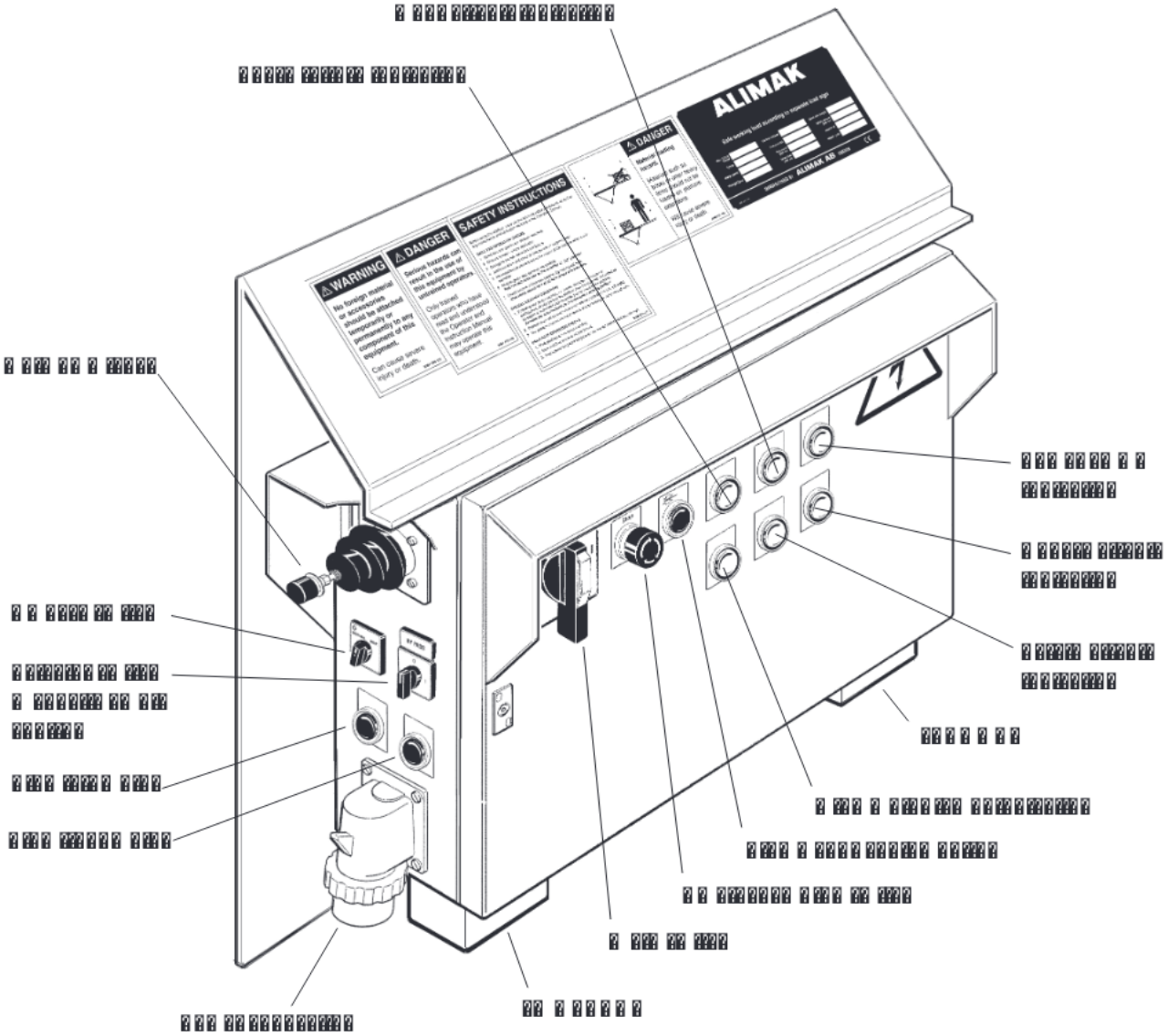
[redacted]

cranelistings.com


ALIMAK
WARNING
DANGER
SAFETY INSTRUCTIONS
DANGER



cranelistings.com



[illegible]

cranelistings.com

[illegible]

[illegible] [illegible] [illegible] [

[illegible]

[illegible]

[illegible]

[illegible]

[

? ? ?



[redacted]

[redacted]

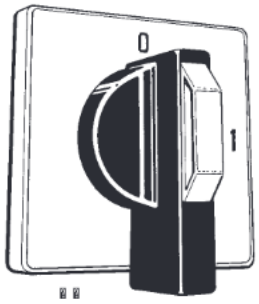
[redacted]

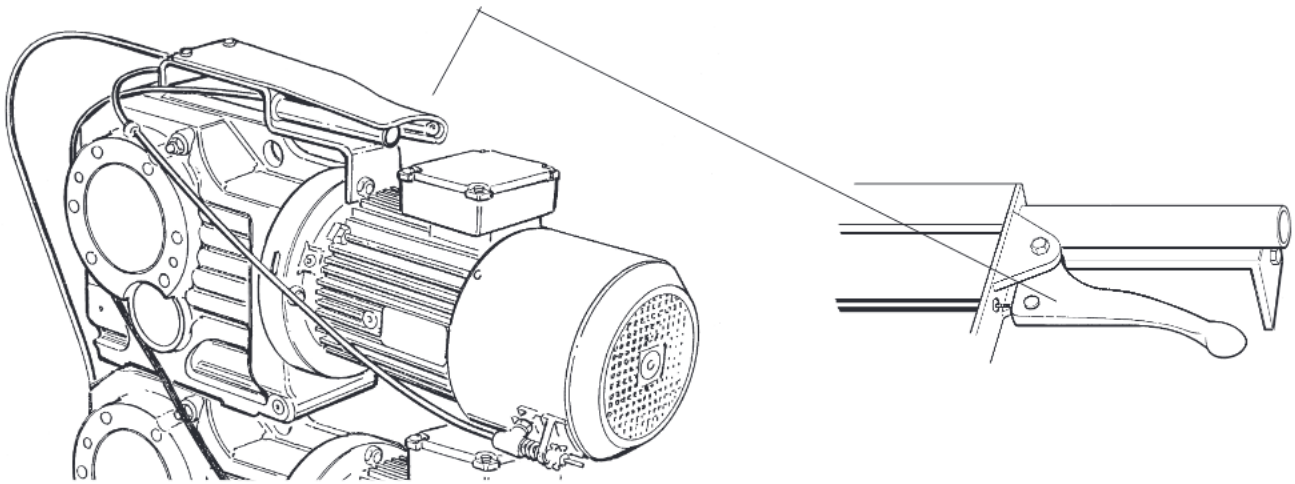
[redacted]

[redacted]

[redacted]

[


0
1



[illegible]



[illegible]

[illegible]

[illegible]

[illegible] [illegible] [illegible] [

[illegible] ..... [illegible]
[illegible] ..... [illegible]
[illegible] ..... [illegible]
[illegible] ..... [illegible]
[illegible] ..... [illegible]

cranelistings.com

[illegible]

[illegible]



[illegible]

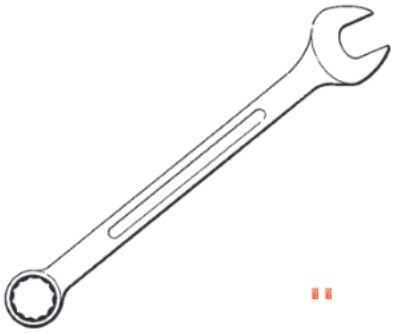
[illegible]

[illegible]

[illegible]

[illegible]

[illegible]



[illegible]

[illegible]

[illegible]

[illegible]

[illegible]

[illegible]

?

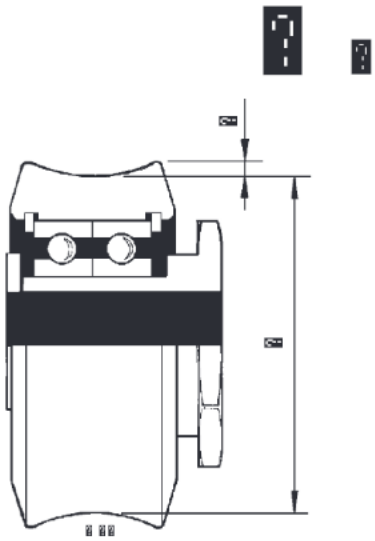
▒▒▒▒▒▒▒	▒▒▒▒	▒▒▒▒▒▒▒▒▒▒
	▒▒ ▒▒▒▒▒▒▒ ▒▒▒▒▒▒▒ ▒▒▒▒ ▒ ▒▒▒▒▒ ▒▒▒▒▒▒▒▒▒▒	▒ ▒▒▒▒▒ ▒▒▒▒▒ ▒▒▒▒▒▒▒▒ ▒▒▒▒▒
	▒▒ ▒ ▒▒▒▒ ▒▒▒▒▒▒▒	▒ ▒▒▒▒▒ ▒▒▒▒▒▒▒▒▒▒▒▒▒ ▒▒▒ ▒▒▒▒▒▒▒▒▒ ▒▒▒▒▒▒▒▒▒▒
	▒▒▒ ▒ ▒▒▒▒▒▒▒ ▒▒▒▒▒▒ ▒ ▒▒▒▒▒▒▒▒▒ ▒▒▒▒▒	▒ ▒▒▒▒▒ ▒▒▒▒▒▒▒▒▒▒▒▒▒ ▒▒▒ ▒▒▒▒▒▒▒▒▒ ▒▒▒▒▒▒▒▒▒▒
	▒▒▒ ▒▒▒▒▒▒▒ ▒ ▒▒▒▒ ▒▒▒▒▒▒	▒ ▒▒▒▒▒ ▒▒▒▒▒▒▒ ▒▒▒▒▒▒▒▒ ▒▒▒▒▒▒ ▒ ▒▒▒▒▒ ▒▒▒▒▒▒▒▒▒▒ ▒▒▒ ▒▒▒▒ ▒▒▒▒▒▒▒▒▒ ▒▒▒▒▒▒▒▒▒▒ ▒▒▒▒▒▒▒▒ ▒▒▒ ▒▒▒ ▒▒▒▒▒▒▒▒ ▒▒▒▒▒▒▒▒▒▒▒▒▒
	▒▒▒ ▒▒▒▒▒▒▒ ▒▒▒▒▒▒	▒ ▒▒▒▒▒ ▒▒▒ ▒▒▒▒▒▒ ▒▒▒▒▒ ▒▒▒▒▒▒▒ ▒▒ ▒▒▒▒▒▒▒ ▒▒▒▒▒▒▒ ▒▒▒▒▒▒ ▒▒▒▒▒▒
	▒▒▒ ▒▒▒▒▒▒▒▒ ▒▒▒▒▒ ▒ ▒▒▒▒▒▒▒▒▒▒▒▒▒▒▒ ▒▒▒▒ ▒▒▒▒▒▒▒▒▒▒▒▒▒▒▒▒▒▒▒	▒ ▒▒▒▒▒ ▒▒▒ ▒▒▒▒▒▒▒▒▒ ▒▒ ▒▒▒ ▒▒▒▒▒ ▒▒▒▒ ▒▒▒ ▒▒▒▒▒▒▒▒▒▒▒
	▒▒▒ ▒▒▒▒▒▒▒▒ ▒▒▒▒▒▒	▒ ▒▒▒▒▒ ▒▒▒▒▒▒▒ ▒▒▒▒▒▒▒▒▒▒ ▒▒ ▒▒▒▒▒▒ ▒▒▒▒▒▒▒ ▒▒▒▒▒▒ ▒▒▒▒▒▒ ▒ ▒▒▒▒▒▒▒ ▒▒▒▒▒▒▒ ▒▒▒▒▒▒▒ ▒▒ ▒▒▒▒▒▒▒▒▒▒▒▒
	▒▒▒ ▒▒▒▒▒▒▒▒▒▒ ▒▒▒▒ ▒▒▒▒▒▒▒▒▒▒▒▒▒▒▒▒▒▒▒

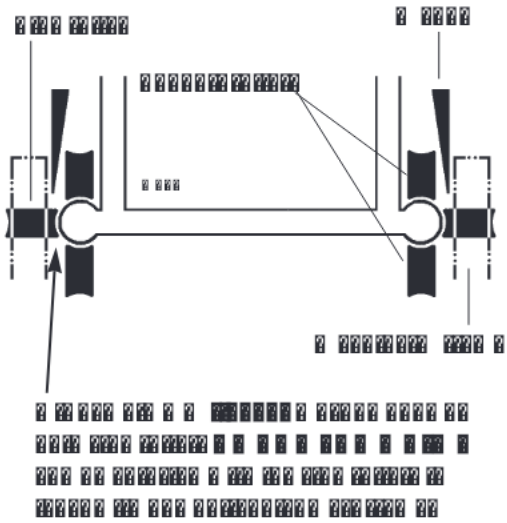
	[illegible]	[illegible]	[illegible]
	[illegible]	[illegible]	[illegible]
[illegible]	[illegible]	[illegible]	[illegible]
	[illegible]	[illegible]	[illegible]
	[illegible]	[illegible]	[illegible]
	[illegible]	[illegible]	[illegible]
	[illegible]	[illegible]	[illegible]
[illegible]	[illegible]	[illegible]	[illegible]
	[illegible]	[illegible]	[illegible]
	[illegible]	[illegible]	[illegible]
	[illegible]	[illegible]	[illegible]
	[illegible]	[illegible]	[illegible]

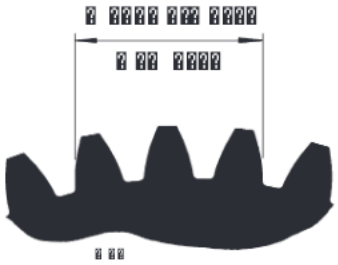
[illegible]

[illegible]

[illegible] [illegible] [illegible] [



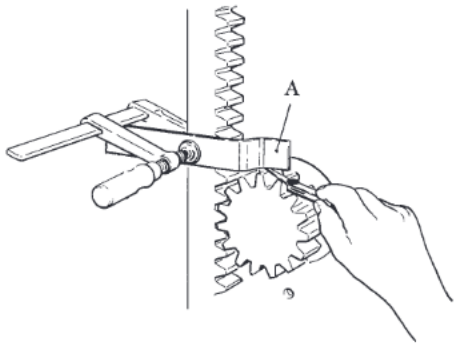




7.1.1.1

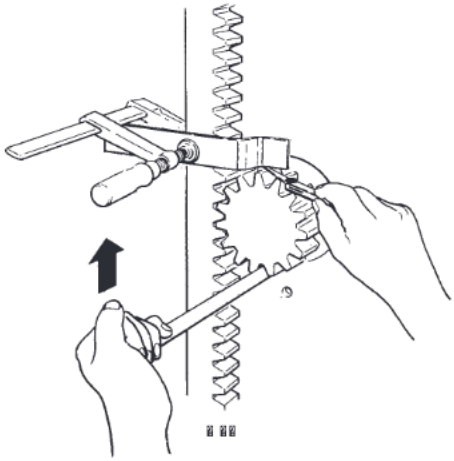
7.1.1.1.1 The 7.1.1.1.1 of 7.1.1.1.1 is 7.1.1.1.1 to 7.1.1.1.1 the 7.1.1.1.1 of 7.1.1.1.1 and 7.1.1.1.1 of 7.1.1.1.1 and 7.1.1.1.1 of 7.1.1.1.1 and

[illegible]



[illegible]

[illegible]



[illegible]

[illegible]

cranelistings.com

[illegible]

[illegible]

[illegible]

[illegible]

[illegible]

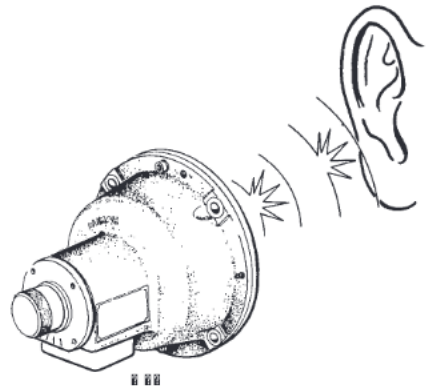
[illegible]

[illegible]

[illegible]

[illegible]

[illegible]



[illegible]

[illegible]

[illegible]

[illegible]

[illegible]

[illegible]

[illegible]

[illegible]

[illegible]

[illegible]

[illegible]

[illegible]

[illegible]

[illegible]

....

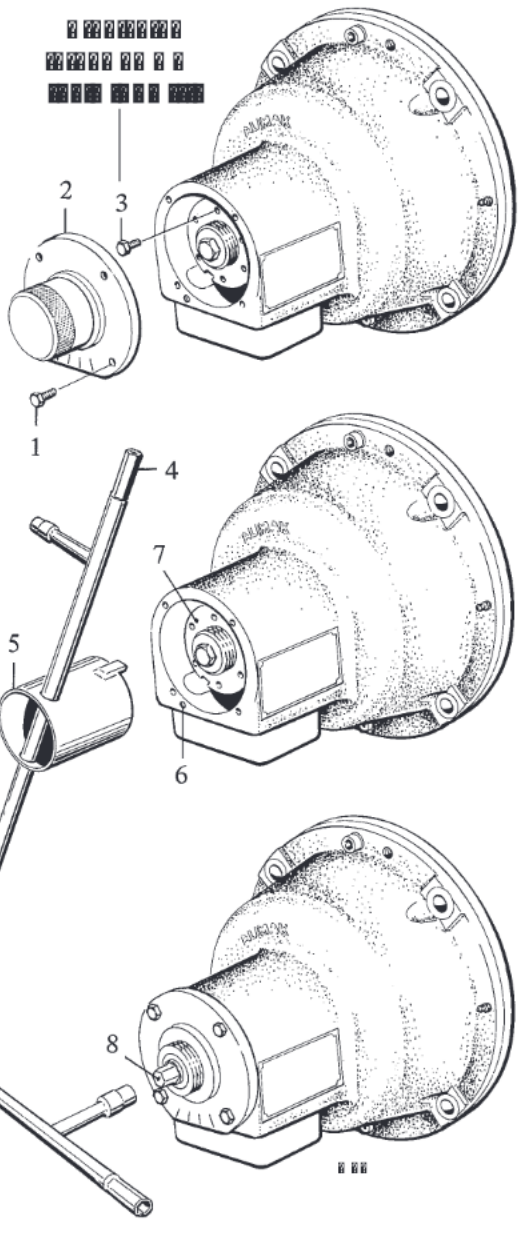
.. ..
....
....
.....
.....
.....

... .
.. ..

. ...



. .....
.....
. ...
. .. .



. .....
.. ..

.. ..

.. . .
....
.. ..
.....

.. ..
....

.. . .

.. ..
....
....
.....

.. . .

.. ..
....
.. ..
....
....

....

***. ... .
....
.. ..
....***

cranelistings.com

? ?????????? ???????

????????	????	?????????? ?? ???	????????? ?????? ? ??????????
?? ????????? ?????? ?? ?????????? ? ? ????	?	? ???????	? ???? ?????????
	?	? ???	? ? ?????? ? ???? ????????
	?	? ?????? ???????	? ?????? ???????
	?	?????????? ? ??????????????	? ???? ???
	?	? ???????? ??????????????	? ??????
	?	? ??????? ???????? ???? ????	? ??????
	?	? ??????? ???????? ???????? ?????? ??????	? ??????
	?	? ??? ??????? ?????????? ????????? ??? ? ??????? ?????? ? ? ???? ???????????	? ???? ???
	?	? ???????????????????????? ??????? ??????? ? ??????? ??????	? ???? ???
???? ????????? ?????? ?? ?????? ???? ? ????	??	? ??????????	? ??????? ? ? ???? ????????

??? ?????????? ??? ??????? ????????? ?????? ???? ???? ???? ? ??? ??? ??????? ???? ?? ????????? ????? ??? ????????? ??? ??? ?????? ? ?????? ?? ? ??? ?? ? ?????? ?? ??????? ??? ??? ? ??????? ???? ?? ?????????????????? ????????? ? ??? ? ? ??? ? ? ? ??? ?????????????? ??? ???????

?? ????????? ?? ????????? ??????? ??????? ??? ??? ??????? ??? ???????? ????????? ?????????

? ? ? ? ? ? ?

????????? ???? ??? ?? ??????? ? ??? ??? ??? ?????

? ?? ??? ??? ??????????? ??????? ??? ?????? ????

??????? ????? ?? ?????????????? ?????????
??? ?????????? ? ??? ??????? ?? ?????? ??? ???
??????? ?? ??? ????????? ?

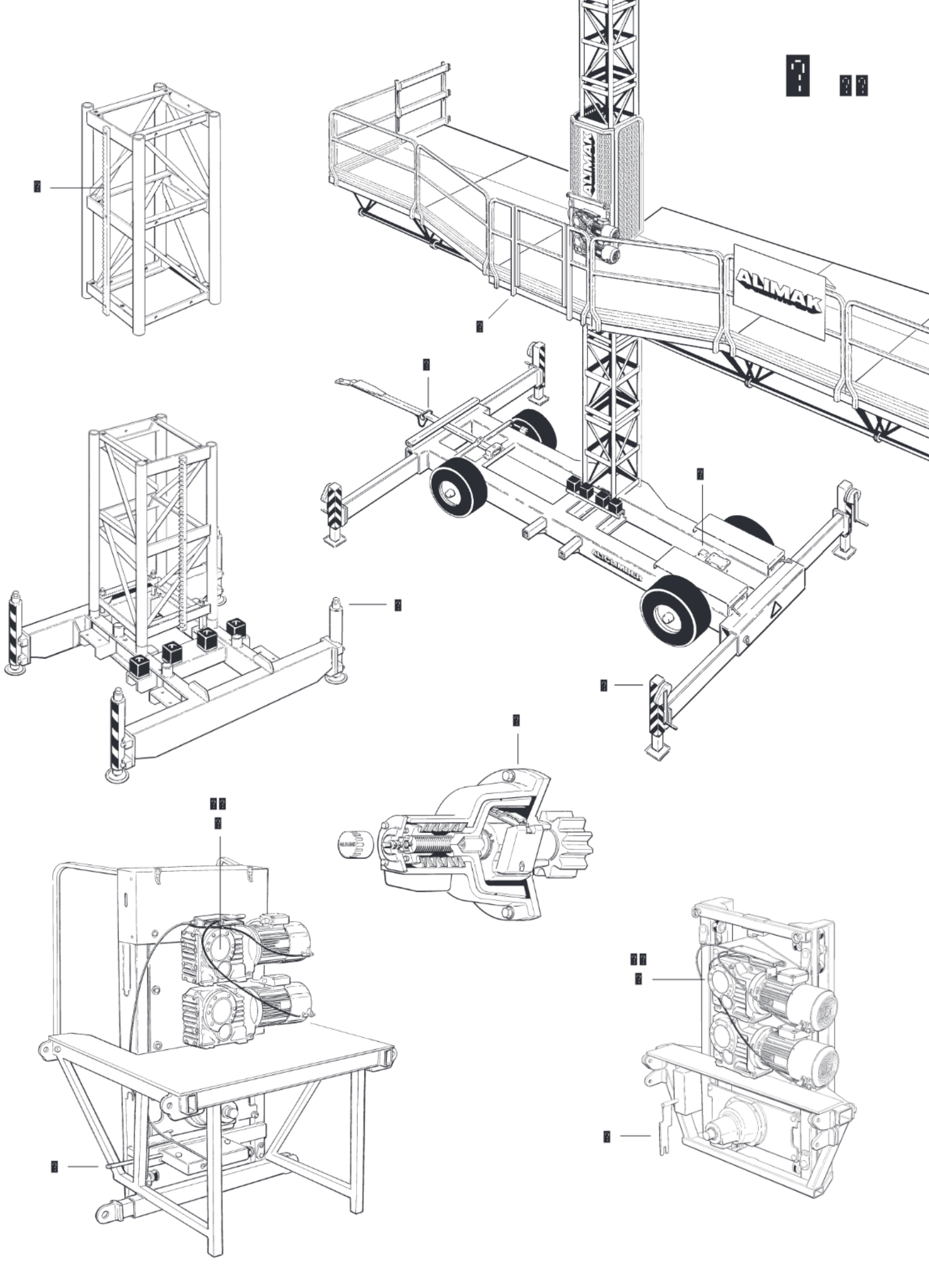
? ? ? ? ? ? ?

?????? ???????

? ?? ??? ??? ? ???? ????????? ??????? ?? ?????? ?? ? ????? ?? ???? ? ?????? ??? ??????? ??????? ?? ?????? ??? ???? ?? ??? ? ?? ??????? ?? ?? ???????

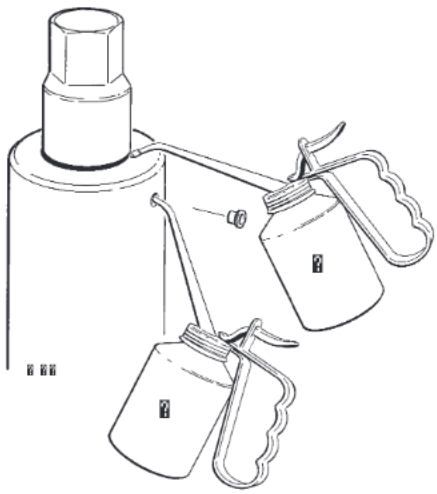
? ?? ?????? ??????? ?????? ??? ??????? ?

cranelistings.com



cranelistings.com

? ??????? ??? ? ?????? ?????? ?????? ? ???????????? ??? ????????????? ????



?? ? ?? ??? ??? ??????? ???? ?? ??? ???? ??????

?? ??????? ??? ??? ?? ??? ?????????? ??? ??? ??? ???? ?? ????? ? ? ? ? ??? ?????????? ????????? ???? ??? ?????? ??????? ??? ???????????????

?? ?????? ???? ?????? ??????????? ?? ? ???? ???? ??? ??? ???? ????? ??? ??? ????????????

?? ?????????? ???? ?????? ?? ????? ? ?? ??

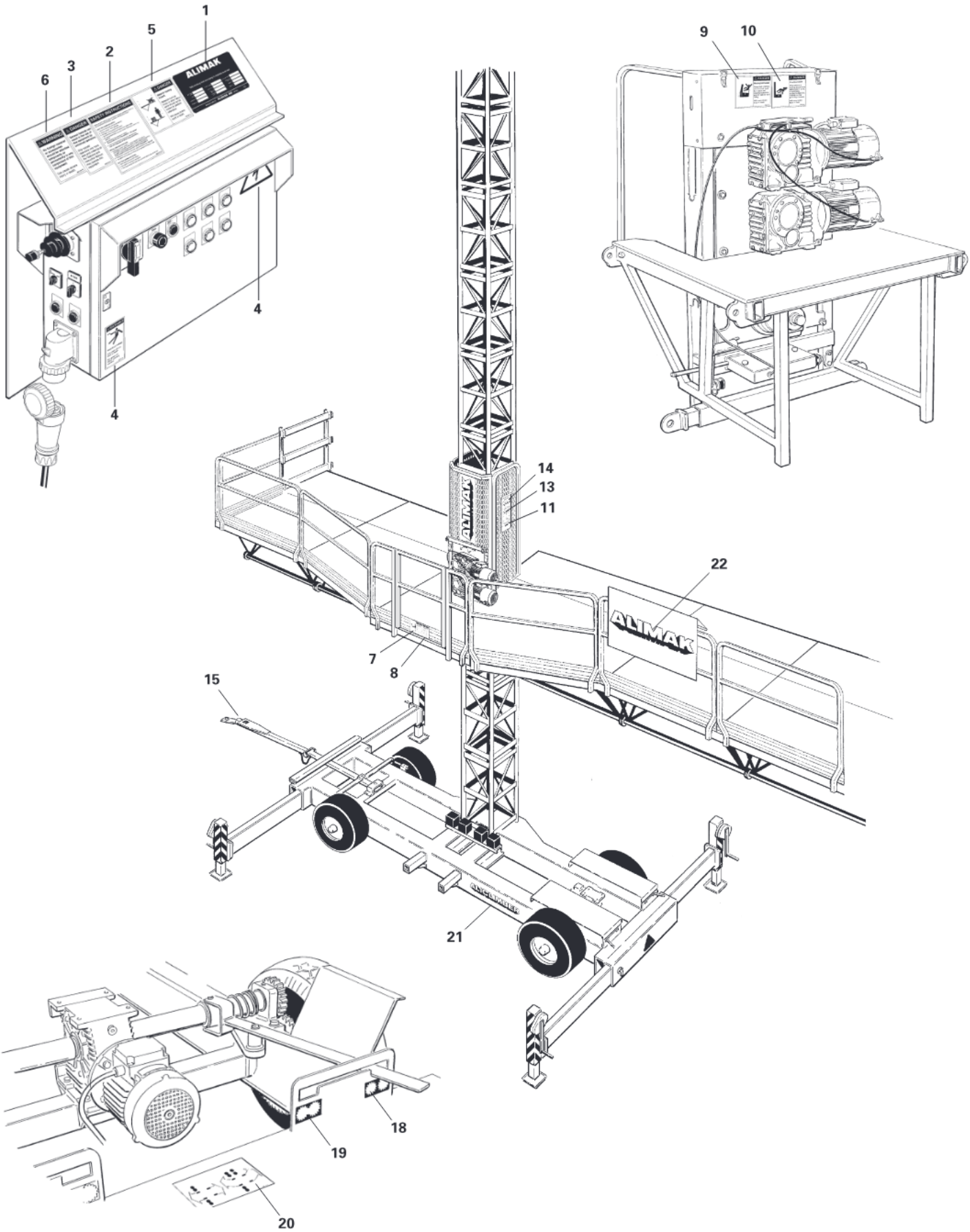
?? ?????????? ??? ??????? ???? ??? ?????? ??? ???? ?? ????????? ????????

cranelistings.com

··········· ····· ··· ·········

····	· ·····	· ·····	····· ··
·	··· ··· ··· ·· ··· ···	· ··· ···	····· ·····
·	· ····· ··· ····· ·····	··· ····· ····· ··· ···	····· ·····
·	· ····· ·····	··· ··· ··· ····· ·····	····· ·····
		· ····· ·····	
		····· ·····	
		····· ·····	
·	· · ····· ···	· ····· ····· ···	····· ·····
	· ····· ···	· ····· ····· · ·	····· ·····
·	· ····· ···	····· ·····	····· ·····
		····· ·····	
·	· ····· ···	· · ····· · ·····	····· ·····
·	· ····· ···	· ····· ····· · ···	····· ·····
		····· ·····	
·	· ····· ···	· ····· ·····	····· ·····
·	· ····· ···	· ····· ·····	····· ·····
··	· ····· ···	· ····· ·····	····· ·····
··	· ····· ···	····· ·····	····· ·····
		·····	
··			
··	· ··· ····· ·····	· ·····	····· ·····
··	· ··· ····· ····· ···	· ·····	····· ·····
··	····· ····· ···	· ····· · ····· ··· ·····	····· ·····
··			
··			
··	··· ····· ····· ···	· ····· ····· ·····	····· ·····
··	····· ····· ···	· ····· ····· ·····	····· ·····
··	··· ····· ····· ···	· ····· ····· ····· ·····	····· ·····
		·····	
··	· ····· ··· ·····		
··	· ··· ·· ·····		

cranelistings.com



cranelistings.com



cranelistings.com

? ??????????????????

? ?? ???? ? ?? ?????????????? ??????? ??????? ??? ????????? ?? ??? ???????? ??? ????????? ?? ??? ??????? ??? ??? ?? ????? ????????? ? ???? ? ?? ?? ????? ?? ??????? ??? ????? ???? ??? ???????? ?????? ??????????????????????????????????????? ??????

??? ? ??? ????????? ?? ??? ???? ? ?? ?????????????? ?? ???????? ??????? ? ??? ????????? ????? ?? ??????? ????? ??? ??? ??? ???? ????? ? ?? ????? ?????? ????? ????? ???? ? ??????? ????????? ? ????????? ??????? ???? ??? ????? ??? ???????? ???????? ????????



??

? ????? ? ????????? ???????

? ??? ?????????? ?????????? ?? ????????? ??????? ??????????? ????? ????? ??? ?? ??????????????? ????

? ?? ?????? ??????? ?????? ?????????



??

? ?????? ? ??? ??? ?????? ? ???? ??????

?? ? ?? ??? ??????? ??????? ? ???? ???????? ?? ??????? ?? ? ???? ?? ??? ???????? ? ???? ???????? ????????? ??? ??? ?????????? ??????? ????????? ?????????? ?????????????? ???? ????????? ??????????

?? ? ???? ?? ????????? ????????? ?? ?? ????????? ?? ??? ?????? ??????? ?????? ??? ? ??? ????????

?? ? ????? ???? ??? ????????? ??? ?? ?????? ????????? ??? ?? ? ???? ??? ? ??? ?? ???? ?? ?? ??????? ???

?? ? ?? ?????? ?????????????????? ?? ??? ???????? ?? ????????? ???? ??? ??? ?? ????????? ??? ????????? ?

?? ? ????? ???? ??? ???? ??????? ?? ??? ?????? ?? ?????? ? ???? ???? ?????? ?? ??????? ??????? ??????? ??? ???? ??? ??? ?? ?? ??????? ??? ??? ??????? ???????? ????? ??? ?? ??? ?? ??? ?????? ??? ??? ??????? ??????? ?? ??? ??????? ? ??? ??????????? ? ??? ??? ???? ???????? ?? ??????????? ? ??? ??????????? ? ??? ?? ??? ?? ?? ?? ?????????

?? ? ????? ? ??? ? ?????? ????????? ??? ? ???? ??? ??? ?? ?? ??????? ??? ?? ?? ??? ?? ?? ?? ????????? ??????????

?? ? ??????? ??? ?????? ????????? ??? ? ???? ??? ??? ???? ???? ???? ??? ??? ???? ???? ?? ????????? ?? ??? ??????? ??????? ? ??? ?????? ???? ??? ?? ?? ????????? ? ???? ?? ??????? ?? ????????? ? ? ??????? ????? ???? ????? ??? ?? ????? ??? ? ??? ? ????????????? ?? ????? ??? ???????? ? ???? ???????? ????????? ??? ?? ???? ??????? ??? ??? ????????? ?? ?????????

cranelistings.com

? .

?? ? ????? ?? ??? ?????????? ???????? ?????? ??????? ?? ??????? ?? ??????? ?????? ?? ??? ????? ??? ??????

?? ? ????? ?????? ?? ?? ???? ?? ?? ?? ??????? ????? ??? ????????????? ???? ????????? ??????? ???? ????????? ????????? ???? ???????? ??? ???????

????? ??? ? ?????? ??? ???? ?????? ?????? ??? ?????? ??? ????????? ????????? ?? ???? ?? ?? ????????? ???? ?? ??? ????? ?? ?????????? ? ????? ????? ??? ?????? ????????? ?? ????????? ???? ????? ??? ?????? ???? ?? ???????? ?? ???????? ? ?????? ??????????

??? ?? ??? ?????? ????? ????????? ?? ??? ???????? ????????? ??????? ?????? ??? ????????? ?? ??????? ?????? ? ?????? ???? ?????????? ?? ? ? ? ?????? ??? ???? ?? ????? ????????? ??????? ? ????? ??? ???????? ? ????????? ???? ?? ???? ???????? ????? ??????? ?? ??? ? ??? ????????? ????????? ???

?????????? ????? ? ???? ??????? ?????? ????? ??? ???? ? ? ?????? ? ?? ???????? ??? ?????? ??? ??? ????????? ???????? ?????? ???? ??????

???? ????

??? ????	???????? ?????	???????? ????? ????????
??? ?????????????? ???? ?? ? ?????????	???????????? ??????? ??????????????	? ?? ????? ??? ?? ??????? ??? ????? ?????????? ??? ?? ?? ????? ???? ??????? ????? ????????
??????? ???? ? ??????? ?????? ?????? ?? ??? ??	? ?????? ?????????????? ????????? ?????????	? ?? ?????? ?? ? ???? ?? ???????? ????? ??? ?? ?? ???? ???? ??? ?? ??? ????? ?????????????? ???????? ?? ????????? ??????? ??????? ????
??? ??????? ?????? ?? ???????? ?? ?????????	? ?? ???? ???? ?? ???? ??????? ???? ???????????? ????????? ? ??????	???? ????????? ????????? ????? ?? ????? ????????? ??? ?? ????????? ?? ????????? ???? ?? ??????? ??????? ????????? ??? ?? ??????? ???? ???????? ??? ???? ?? ??? ?? ???????
??? ??????? ?????? ??? ??? ?? ?????????????????? ?????? ???????	?? ???? ????????? ?? ??? ???? ????????	?? ???? ?? ???? ??????? ?? ????????? ?????????????

????? ?? ???? ?? ????????? ??????? ??? ? ?? ?????? ??????????

cranelistings.com

ALIMAK STD. DESIGNATION SYSTEM

\+ SIGN MEANS POSITION
\- SIGN MEANS ITEM

ALIMAK ITEM DESIGNATION SYSTEM

LEGEND

-A = BOXES AND PANELS ETC..
-B = PULS TRANSMITTERS ETC..
-C = CAPACITATORS
-D = PLC-SYSTEMS AND COMPUTORS
-E = LIGHTS AND FANS
-F = FUSES AND SIMULAR
-G = BATTERIES AND CHARGERS
-H = BUZZERS AND SIGNAL LAMPS
-K = RELAYS AND SIMULAR
-L = MAGNETS AND INDUCTORS
-M = MOTORS
-N = ANALOG COMPONENTS
-P = METERS
-Q = POWER SWITCHES
-R = RESISTORS
-S = SWITCHES AND SIMULAR
-T = TRANSFORMERS
-U = VFC-UNITS, SOFTSTARTERS AND SIMULAR
-V = DIODS TRANSISTORS ETC..
-W = CABLES AND WIRE
-X = TERMINALS AND OUTLETS
-Y = BRAKES AND ACTUATORS
-Z = FILTERS LIKE RC-UNITS AND SIMULAR

ALIMAK POSITION DESIGNATION SYSTEM

LEGEND

+C+M = MAIN ELECTRICAL PANEL ON THE PLATFORM
+C = COMPONENTS ON THE PLATFORM
+C1 = COMPONENTS ON DRIVE UNIT 1 (LEFT)
+C2 = COMPONENTS ON DRIVE UNIT 2 (RIGHT)
+C+D1 = DRIVE UNIT 1 (LEFT)
+C+D2 = DRIVE UNIT 2 (RIGHT)
+H = AM CONTROL BOX AT BASE
+H+B = AM CONTROL PANEL
+H+D = CATWALK B-PANEL
+L = LANDING EQUIPMENT
+L+P = LANDING CONTROL BOX
ETC..

EXAMPLE

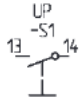
+C1-S1 = SWITCH 1 ON DRIVE UNIT 1
+C+M-K1 = CONTACTOR 1 IN THE MAIN PANEL ON THE PLATFORM
+C1-M1 = MOTOR 1 ON DRIVE UNIT 1

THE POSITION DESIGNATION IN THE DRAWING HEADER APPLIES TO THE WHOLE DRAWING IF NOT OTHERWISE STATED

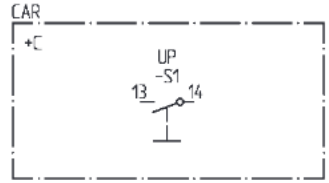
PLATFORM
SAFETY CIRCUIT
+C+M
CIRCUIT DIAGRAM

EXAMPLE

DESIGNATION FOR THIS SWITCH IS +C+M-S1
WHICH MEANS SWITCH 1 IN THE MAIN PANEL ON THE PLATFORM



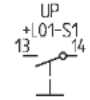
IF THE SWITCH IS DRAWN IN A BOX LIKE THIS IT IS THE POSITION DESIGNATION IN THE BOX THAT APPLY FOR EVERY THING INSIDE THAT BOX UNLESS OTHER WISE STATED



EXAMPLE

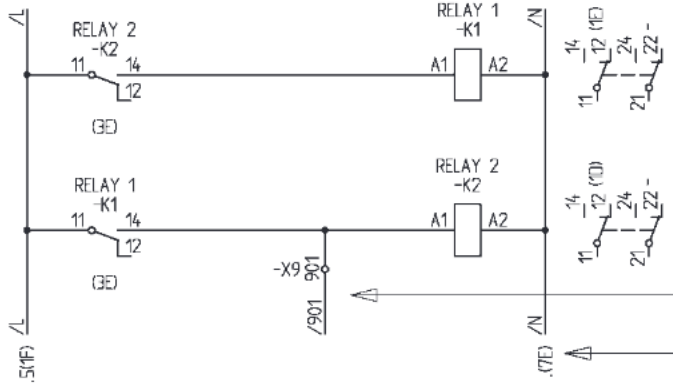
DESIGNATION FOR THIS SWITCH IS +C-S1
WHICH MEANS SWITCH 1 ON THE PLATFORM

THE WHOLE DESIGNATION CAN ALSO BE WRITTEN ON THE SYMBOL AND THEN IT IS THAT DESIGNATION WHICH WILL APPLY FOR THAT COMPONENT



EXAMPLE

DESIGNATION FOR THIS SWITCH IS +L01-S1
WHICH MEANS SWITCH 1 ON LANDING 01



TERMINALGROUP -X9 IS CONNECTION POINTS FOR OPTIONAL EQUIPMENT. IF THERE IS NO CROSS-REFERENCE PRESENT THEN THE TERMINAL IS NOT CONNECTED.

EXAMPLE
.(7E) = CROSS-REFERENCE TO PRESENT PAGE ,COORD. 7E
.5(2F) = CROSS-REFERENCE TO PAGE 5, COORD 2F

ALIMAK COLOUR CODE SYSTEM

LEGEND

BK = BLACK
BN = BROWN
BU = BLUE
GN = GREEN
GY = GREY
OG = ORANGE
PK = PINK
RD = RED
TQ = TURQUOISE
VT = VIOLET
WH = WHITE
YE = YELLOW
GD = GOLD
SR = SILVER

GNYE = GREEN & YELLOW
YG = SHORTEND VERSION OF GREEN & YELLOW (GNYE)

Rev.	Modification	By	Date

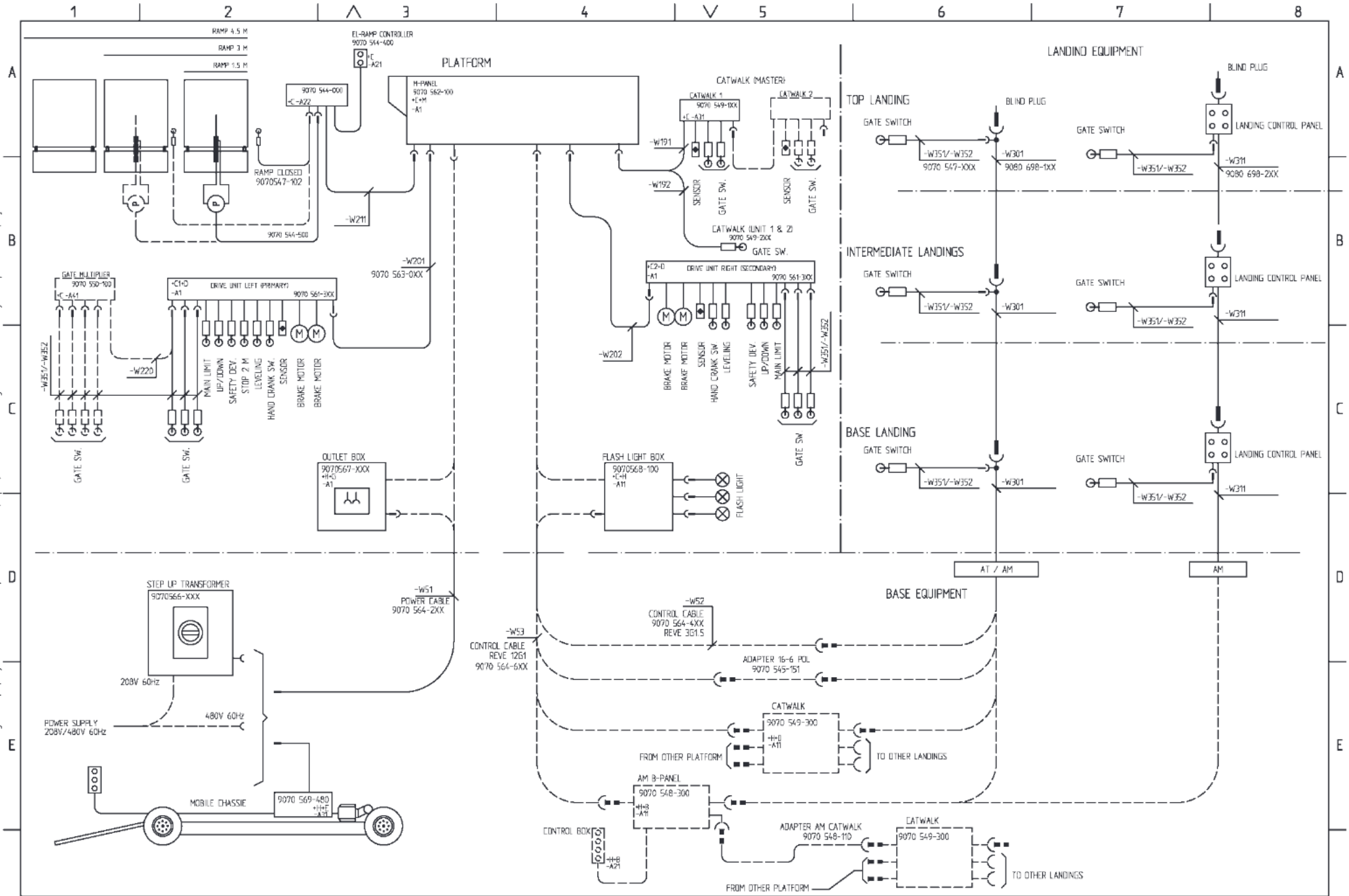
ALIMAK

PLATFORM
EXPLANATIONS APF, AT & AM
ELECTRICAL
DESIGNATION SYSTEM

Designed	MAST	Drawn	MAST	Date	2001-03-26
Scale	-	Approved	JE	Date	2001-03-26
Source	S -	Id.no.			90705655 / EK____001
Pages	24	Next page	2	Page	1

This drawing is our property and shall not without permission be altered, copied, used for manufacturing or communicated to any other person or company.

cranelistings.com



Rev.	Modification	By	Date

ALIMAK

PLATFORM
APF,AT & AM

PRINCIPAL ARRANGEMENT

Designed	MAST	Drawn	MAST	Date	2001-03-26
Scale	–	Approved	JE	Date	2001-03-26
Source		Id.no.			90705565 / EK___002
Pages	24	Next page	3	Page	2

This drawing is our property and shall not without permission be altered, copied, used for manufacturing or communicated to any other person or company.

cranelistings.com

[illegible]

cranelistings.com

? ????? ????? ??

? ?????? ?? ?????

? ????? ??? ??????? ??????? ??????? ????? ??? ???? ??? ????????? ??? ????? ?????? ????? ?? ??? ??? ???? ?????? ??? ? ?? ??? ????????? ????????? ????????? ??? ????? ? ????? ? ????? ???? ??? ???? ?? ????????? ??????

? ??? ???? ? ????? ?? ? ??? ?? ? ??? ?? ????????? ? ??? ??? ??? ? ??????

? ??? ?????

? ??? ???? ??? ??????? ??????? ???? ? ???? ??? ??????? ???? ??? ?? ?????? ??? ????????? ????????? ??? ???? ? ???? ????????? ?????????? ?? ??????? ??? ??? ???? ????????

? ??? ????? ?????? ??????? ???? ?? ?? ????? ? ??? ?????? ?? ????? ? ??? ???????? ?? ????? ??? ??? ????? ?????? ??????????

? ??????? ????

? ??????? ????????? ?? ???? ??????? ??? ??? ?????? ?????? ?????? ??? ??? ????? ??? ????????? ??? ???? ??????? ??? ??????? ??? ??? ???? ??????? ??? ? ??? ?? ??? ? ??????? ??????? ? ? ? ??? ? ? ? ? ?? ???????? ?? ? ??? ????? ????????? ????????? ????????

? ???? ???????? ????????? ??? ?? ? ??? ????? ??????? ?????? ??? ????????? ??? ???? ??? ????????? ?? ????? ???????? ?? ????? ????????? ? ?? ????? ? ?? ?? ??? ???? ????? ????????? ? ??? ?? ?????? ??????? ?? ? ???????? ??? ????? ?? ??? ???? ??? ?? ?? ??? ??????????? ?????? ????? ??????? ??????? ??????? ??????? ?????? ??????? ?????

? ????? ?? ??????? ????? ??? ???????? ? ????????? ?????? ??? ????????? ? ?????? ????????? ?? ??????????????????

? ?? ???? ??? ???????? ???? ??? ??? ? ??? ???????? ??? ??????? ? ??????? ? ? ??? ? ?? ???? ??? ? ????? ???? ???? ???

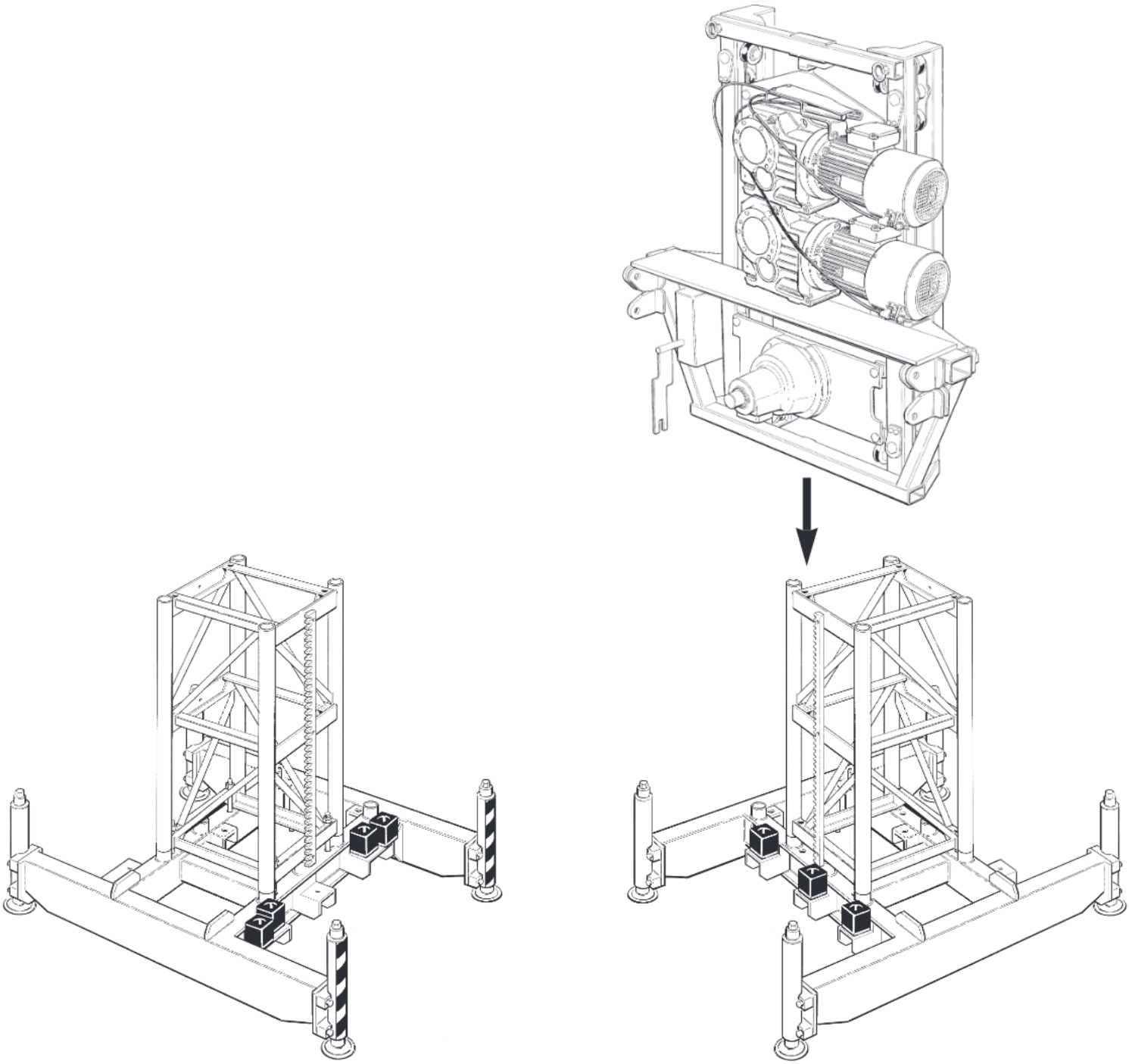
?????? ? ????? ??????? ? ????????? ? ?????

? ????????? ?????? ??????? ??? ??? ??????? ???? ?? ???? ???? ?????? ??????????? ?????????? ?????????????????? ??????

cranelistings.com

[illegible]

[illegible] [illegible] [illegible] [



[illegible]

[illegible]

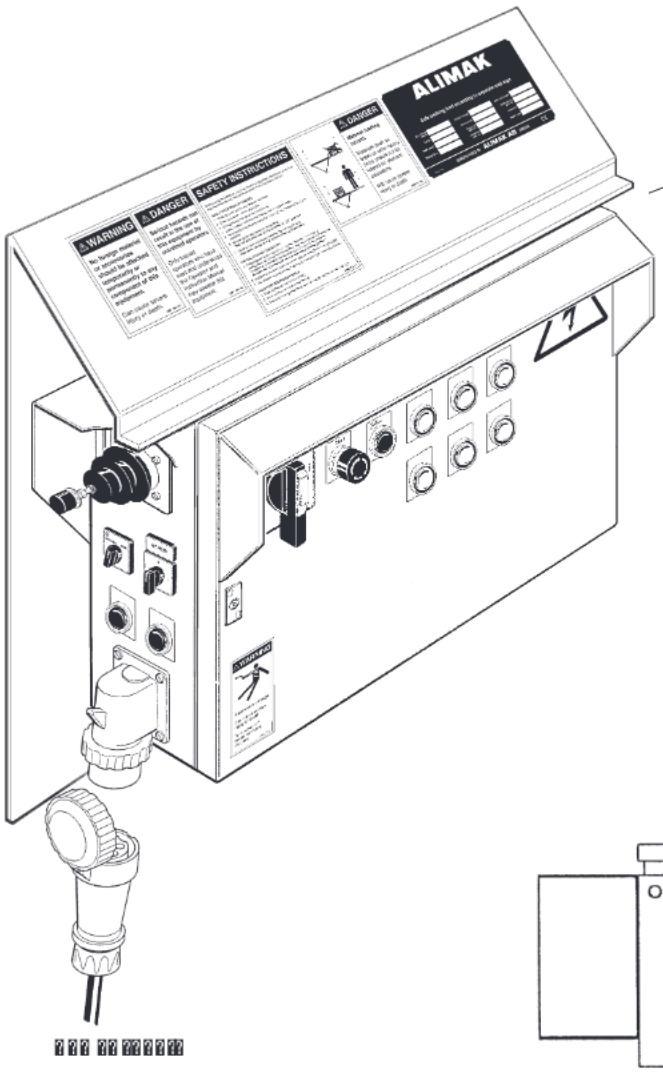
[illegible]

[illegible]

[illegible]

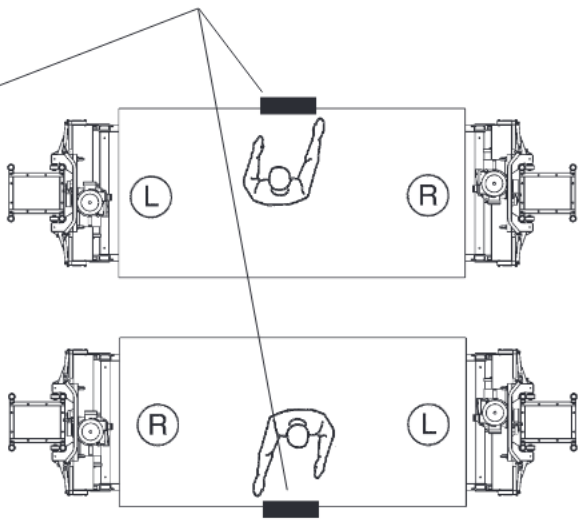
[illegible]

[illegible]

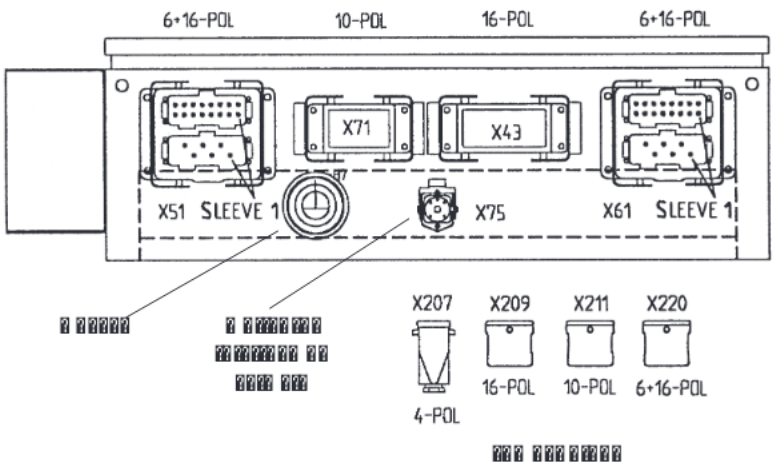


[illegible]

[illegible]



[illegible]



[illegible]

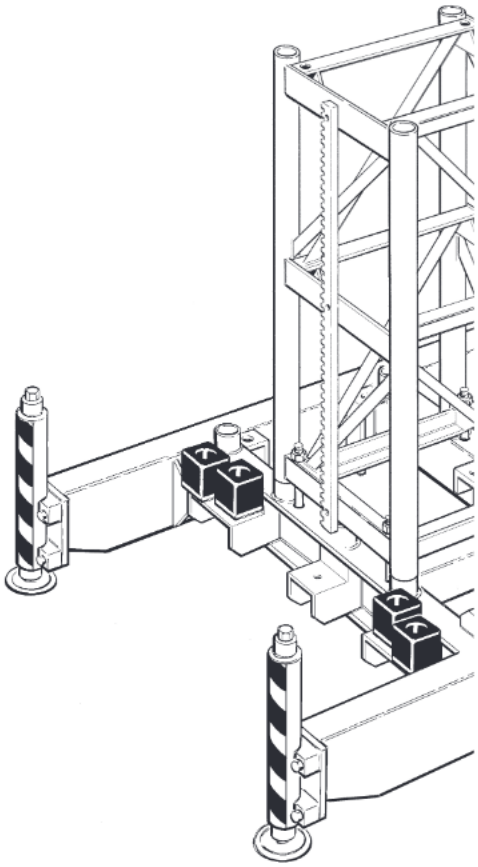
cranelistings.com

[illegible]

[illegible]

[illegible]

[illegible]



[illegible]	[illegible]
[illegible]	[illegible]
[illegible]	[illegible]
[illegible]	[illegible]
[illegible]	[illegible]
[illegible]	[illegible]

[illegible]

[illegible]

$$[illegible] = \sqrt{[illegible]}$$

$$[illegible] = \sqrt{[illegible]}$$

[illegible]

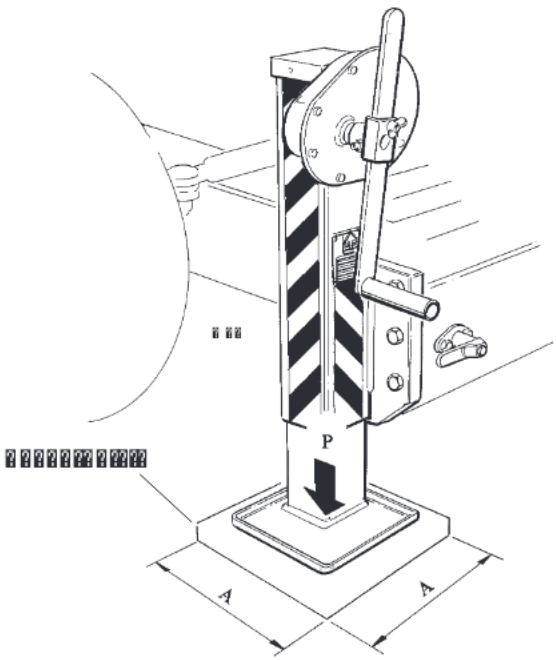
[illegible]

[illegible]

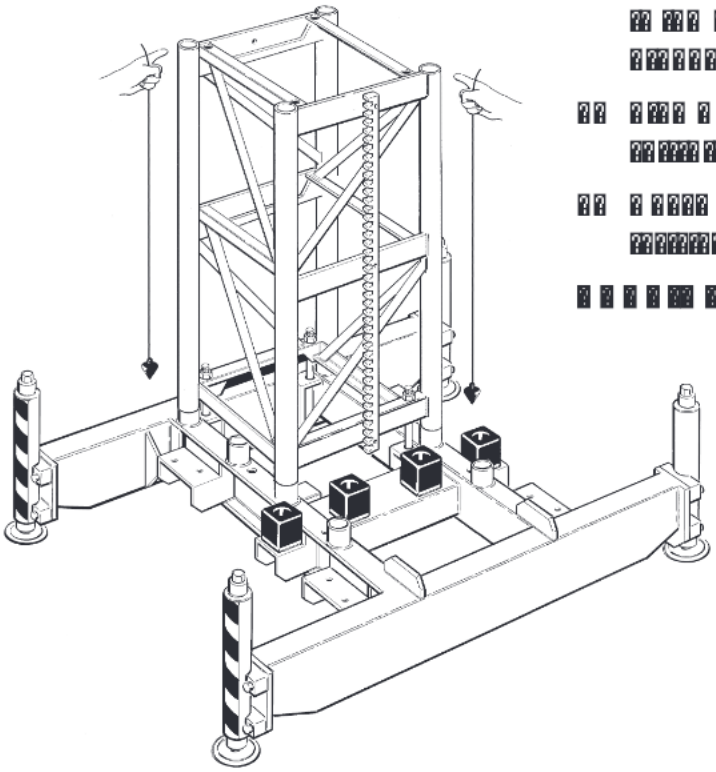
[illegible]

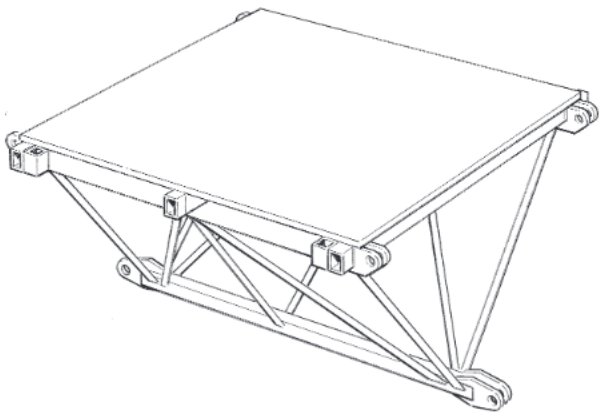
$$[illegible] = \sqrt{[illegible]}$$

$$[illegible] = \sqrt{[illegible]}$$

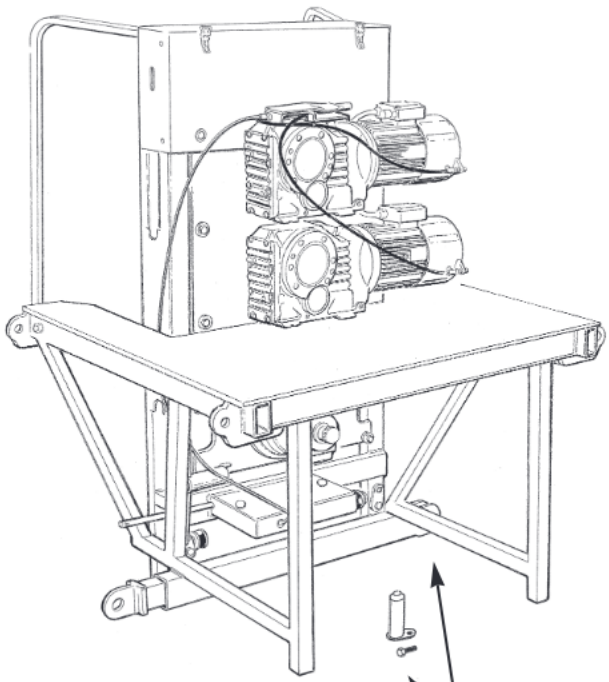


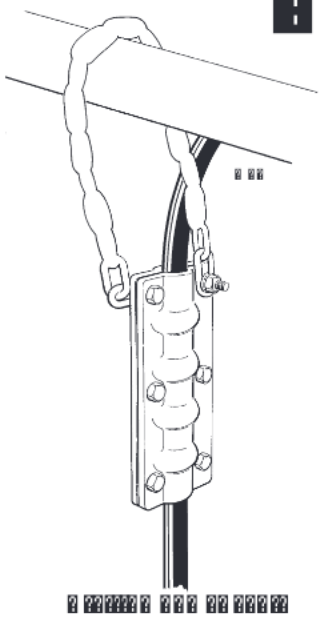
cranelistings.com

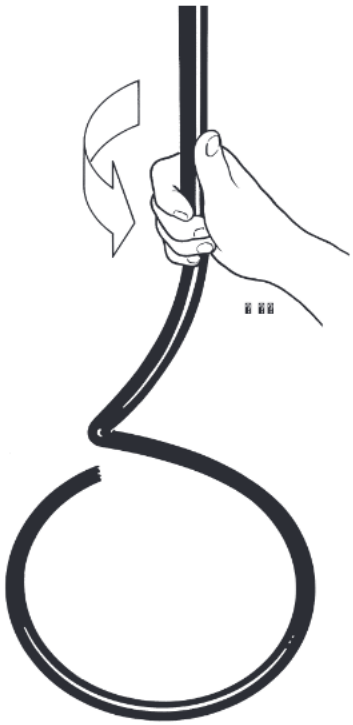










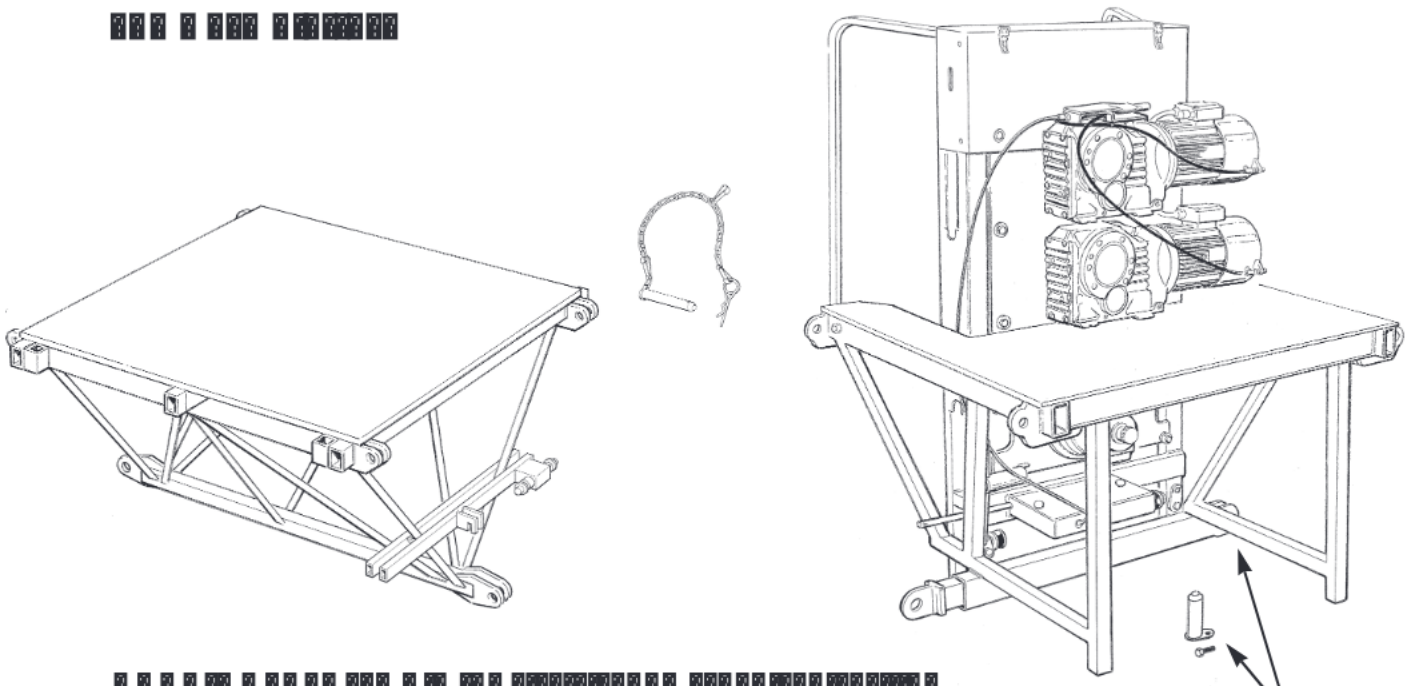


cranelistings.com

? ? ?

[illegible]

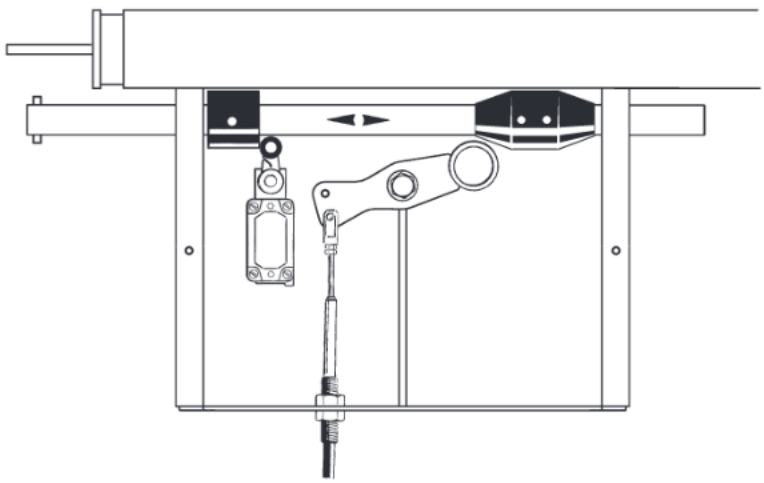
[illegible]



[illegible]

[illegible]

[illegible]

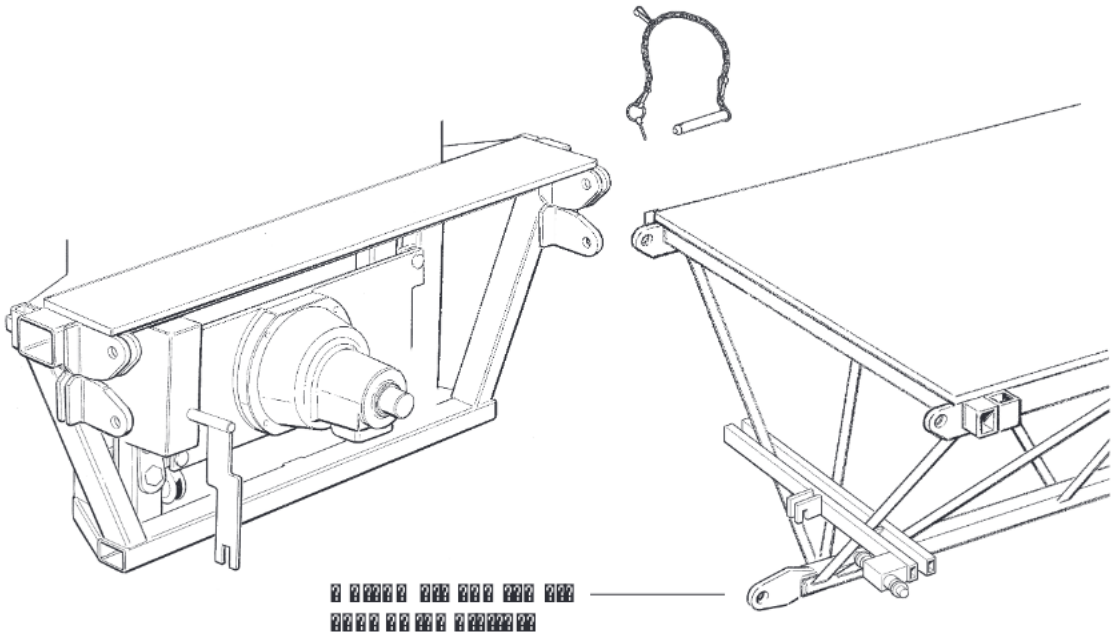


[illegible]

cranelistings.com

[illegible]

[illegible]

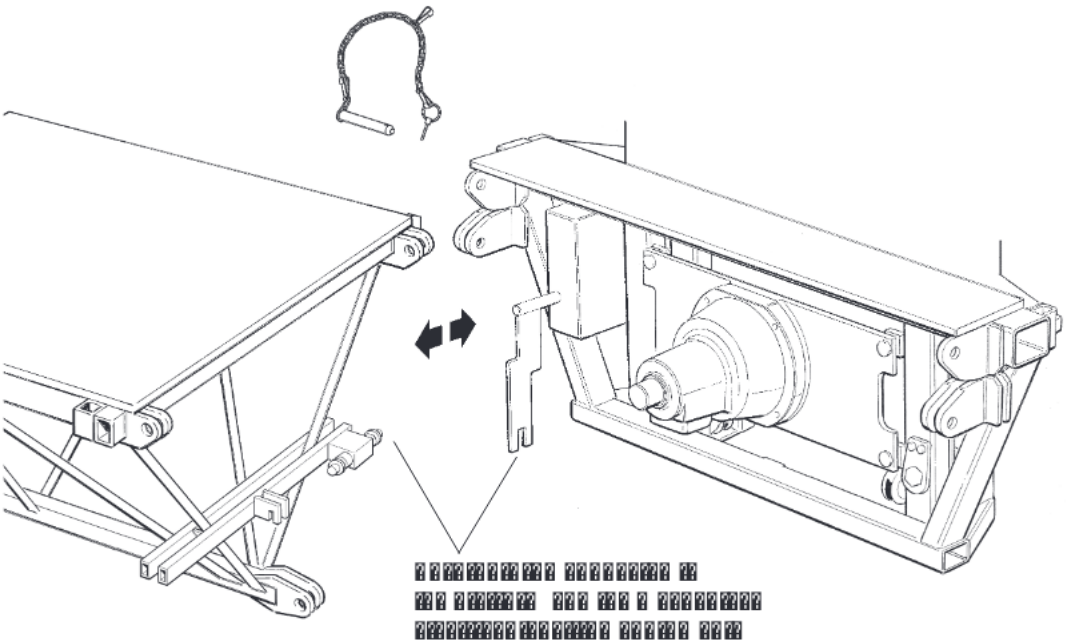


[illegible]

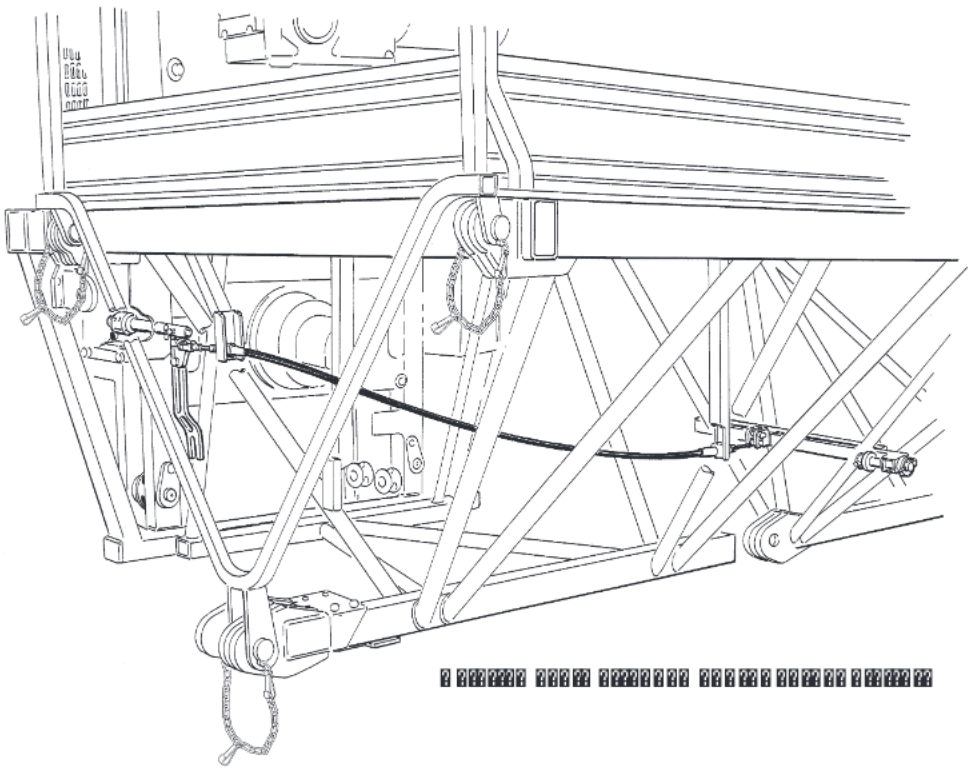
[illegible]

cranelistings.com

[illegible]



[illegible]



[illegible]

cranelistings.com

[illegible]

[illegible]

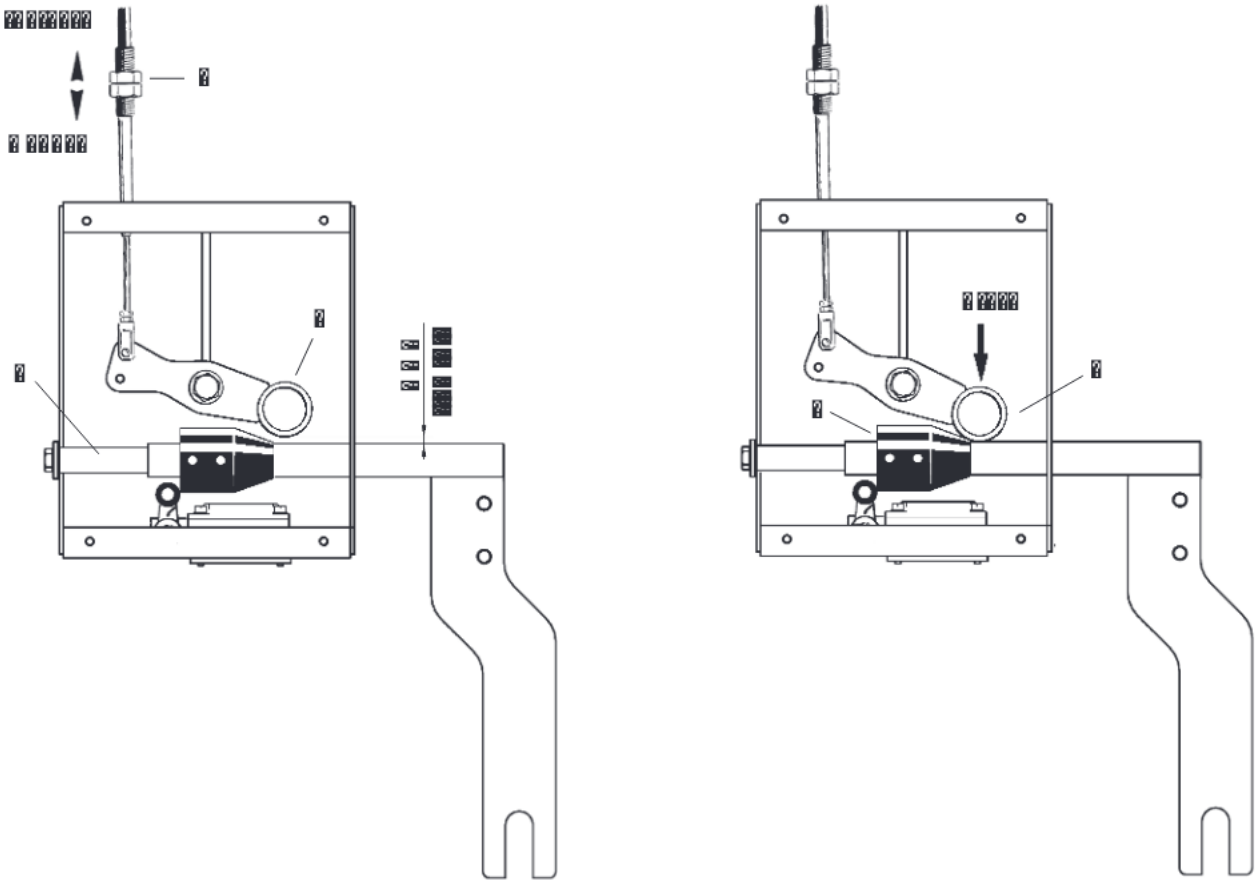
[illegible]

[illegible]

[illegible]

[illegible]

[illegible]



[illegible]

[illegible]

[illegible]

cranelistings.com

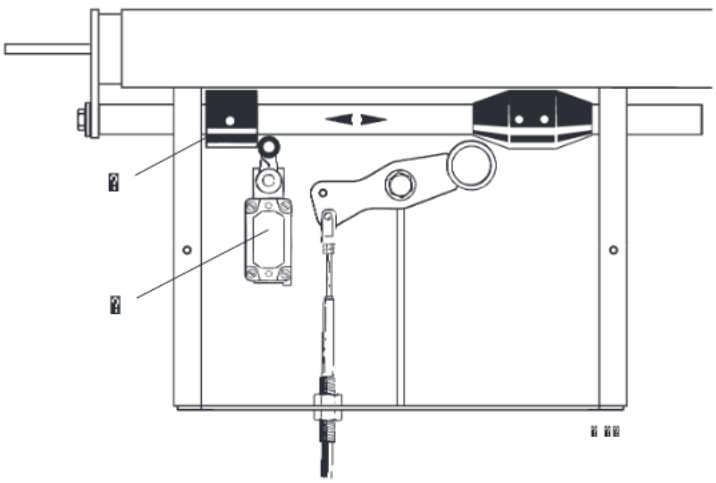
....

[illegible]

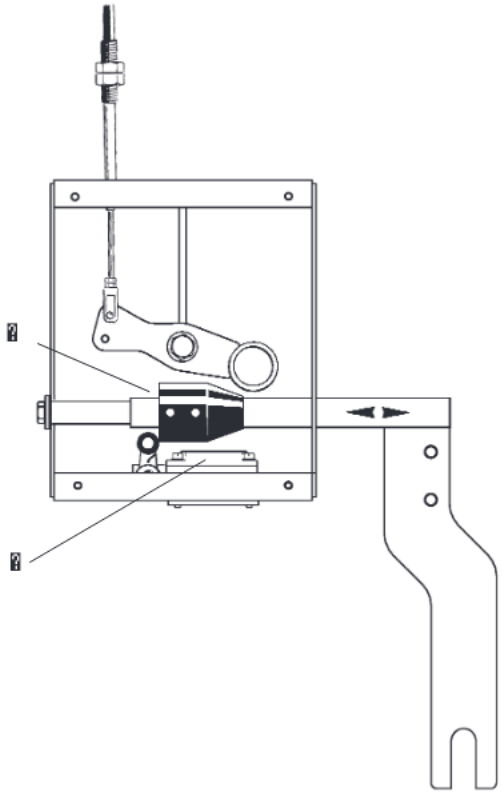
[illegible]

[illegible]

[illegible]



[illegible]

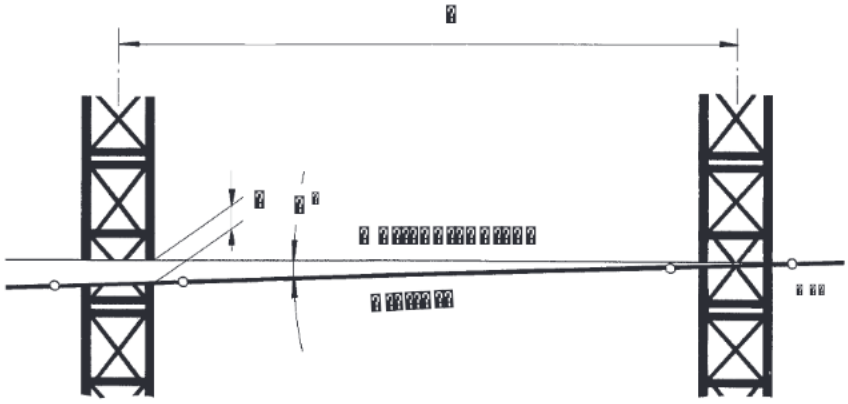


[illegible]

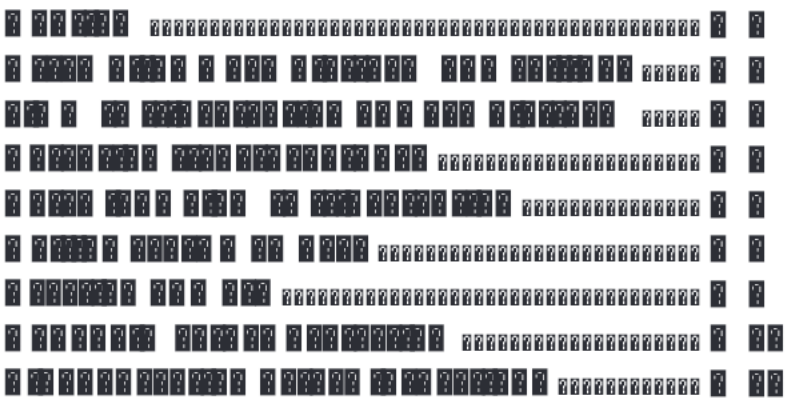
[illegible]

[illegible]

[illegible]



cranelistings.com

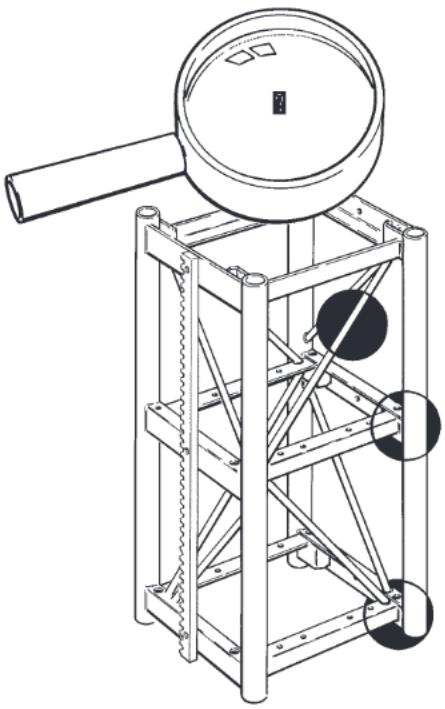


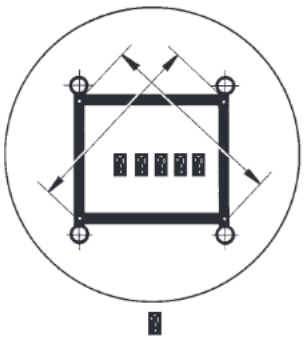
cranelistings.com

? ? ? ? ?? ? ?

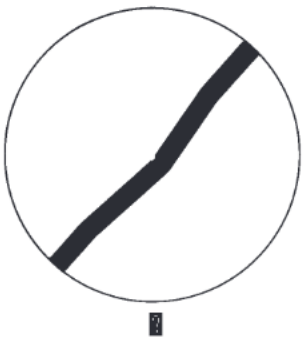
? ????? ??????????? ?? ??? ? ???? ? ??? ???? ??? ??????? ??????????? ?????????? ?????? ??? ????????????? ??? ??? ????? ?? ?????? ?????????????????? ??? ???????????

?? ???? ?????????????? ??? ?? ??????? ??????????? ?? ????? ?? ????? ???? ? ?? ? ??? ????????? ? ??? ???? ?? ?????? ???? ??????? ? ?? ? ????? ??? ???????? ? ??? ?? ?? ? ???????? ?????? ??? ?? ??????? ??? ??? ??????? ?? ??? ??? ??? ?? ?????? ?????? ? ??????????? ??????? ? ??? ?? ?????? ?????? ??? ???????? ?? ??? ???? ??????? ???????







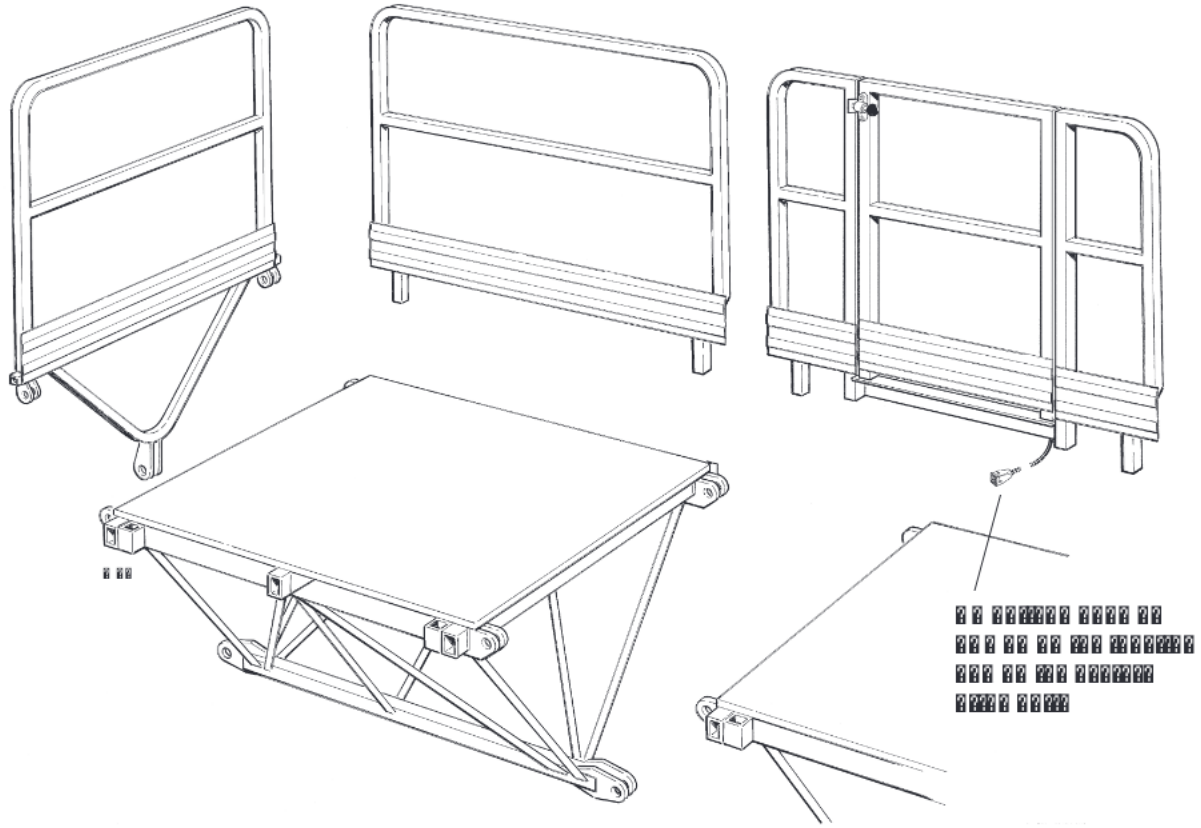




cranelistings.com

▯ ▯▯▯▯ ▯▯▯▯ ▯ ▯▯▯ ▯▯▯▯▯▯▯ ▯▯▯▯ ▯▯▯▯▯▯▯

▯ ▯▯▯ ▯▯▯▯▯▯ ▯ ▯▯▯ ▯ ▯▯▯ ▯▯▯▯ ▯ ▯▯▯ ▯▯▯▯▯▯▯ ▯ ▯▯ ▯▯▯ ▯▯▯ ▯▯ ▯▯▯▯▯▯▯ ▯▯ ▯ ▯▯▯▯▯▯ ▯▯ ▯▯ ▯ ▯▯▯▯▯ ▯▯▯▯▯▯▯ ▯▯ ▯ ▯ ▯▯▯ ▯▯▯▯▯▯▯ ▯▯ ▯▯▯ ▯▯ ▯▯▯ ▯▯ ▯▯▯ ▯▯▯▯▯▯ ▯▯▯▯ ▯ ▯▯ ▯▯▯ ▯ ▯▯▯ ▯▯▯▯▯▯▯ ▯▯▯▯▯▯ ▯▯▯▯▯▯▯▯ ▯▯▯ ▯▯▯▯▯▯▯ ▯▯▯ ▯▯ ▯▯▯▯▯▯▯▯ ▯▯▯▯ ▯▯▯▯▯▯▯▯▯▯▯▯▯▯▯▯



▯ ▯▯

▯▯ ▯▯▯▯▯▯▯ ▯▯▯▯▯ ▯▯
▯▯▯ ▯▯ ▯▯ ▯▯▯ ▯▯▯▯▯▯▯▯
▯▯▯ ▯▯ ▯▯▯ ▯▯▯▯▯▯▯
▯▯▯▯▯ ▯▯▯▯▯



▯ ▯▯

▯ ▯▯▯▯▯ ▯▯▯ ▯▯▯▯▯ ▯▯▯▯▯ ▯▯▯▯▯▯▯ ▯▯▯▯▯▯▯▯

▯ ▯▯ ▯▯▯▯▯▯▯▯ ▯▯▯▯▯ ▯▯▯ ▯▯▯▯▯▯▯▯▯▯ ▯ ▯▯▯▯▯ ▯▯▯ ▯▯ ▯▯ ▯▯▯▯▯▯▯▯

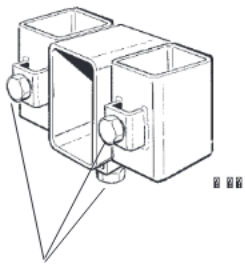
- ▯ ▯▯▯ ▯▯▯▯▯▯ ▯ ▯▯▯▯ ▯▯▯ ▯▯▯▯▯▯▯▯ ▯▯▯▯▯▯ ▯▯ ▯▯▯▯▯ ▯▯▯▯ ▯▯ ▯▯▯ ▯ ▯▯▯ ▯▯▯▯▯▯ ▯▯ ▯▯▯▯▯▯ ▯▯ ▯▯▯▯▯▯▯▯▯ ▯ ▯▯▯ ▯▯▯▯▯▯▯▯▯▯ ▯ ▯▯ ▯▯▯▯ ▯▯ ▯▯▯ ▯▯▯▯▯▯▯▯ ▯▯▯▯▯▯▯ ▯▯ ▯▯▯ ▯ ▯▯ ▯▯▯ ▯▯ ▯▯▯▯ ▯▯▯▯▯▯▯ ▯▯▯▯ ▯▯▯▯▯▯▯▯ ▯▯▯ ▯▯▯▯▯▯▯▯▯ ▯ ▯▯▯ ▯▯▯▯▯▯▯ ▯▯ ▯▯▯▯▯ ▯▯▯▯ ▯ ▯▯▯▯▯▯▯▯▯
- ▯ ▯▯▯ ▯▯▯▯▯▯▯▯ ▯▯▯▯▯▯▯▯ ▯▯▯▯ ▯▯▯ ▯▯▯ ▯ ▯▯▯▯ ▯▯▯ ▯ ▯▯ ▯▯ ▯ ▯▯▯ ▯ ▯▯▯ ▯▯▯▯▯▯▯▯ ▯▯ ▯ ▯▯▯▯▯▯▯▯ ▯▯▯▯▯▯▯▯/
- ▯ ### ▯▯ ▯ ▯▯▯▯▯▯▯▯▯ ▯▯ ▯▯▯ ▯▯▯▯▯ ▯▯▯▯▯▯▯▯▯▯ ▯▯
  ▯ ▯▯▯ ▯ ▯▯▯ ▯▯▯▯▯▯▯▯ ▯▯▯▯▯▯▯▯ ▯▯▯ ▯▯▯▯▯ ▯▯ ▯▯ ▯▯▯ ▯▯▯▯▯▯▯ ▯▯▯ ▯▯ ▯▯▯▯▯ ▯ ▯▯▯▯
- ▯ ### ▯▯ ▯ ▯▯▯▯▯▯▯▯▯ ▯▯ ▯▯▯ ▯▯▯▯▯ ▯▯▯▯▯▯▯▯▯▯ ▯▯
  ▯▯▯▯▯▯▯▯ ▯▯▯▯▯▯▯▯ ▯▯▯ ▯▯▯▯ ▯▯▯▯▯ ▯▯ ▯▯ ▯▯▯ ▯▯▯▯▯▯▯ ▯▯▯ ▯▯ ▯▯▯▯▯ ▯ ▯▯▯▯
- ▯ ▯ ▯ ▯ ▯▯ ▯ ▯ ▯▯▯ ▯▯▯▯▯ ▯▯▯▯▯ ▯▯▯▯▯▯ ▯▯▯ ▯▯▯▯▯ ▯ ▯▯▯ ▯ ▯▯▯▯▯
  ▯ ▯▯▯ ▯▯▯ ▯▯▯▯▯ ▯▯▯ ▯▯▯▯▯▯▯ ▯▯▯▯▯ ▯▯▯▯▯ ▯▯▯▯
  ▯▯▯ ▯▯▯▯ ▯ ▯▯▯▯▯ ▯▯▯▯ ▯▯▯▯▯▯ ▯▯▯ ▯▯ ▯▯▯ ▯▯▯▯▯
  ▯▯▯▯▯▯▯ ▯ ▯▯▯▯▯▯▯ ▯▯▯ ▯▯▯▯▯▯▯▯ ▯▯▯▯▯▯▯▯▯ ▯▯ ▯▯▯
  ▯▯▯▯▯ ▯▯▯▯▯

cranelistings.com

[illegible]

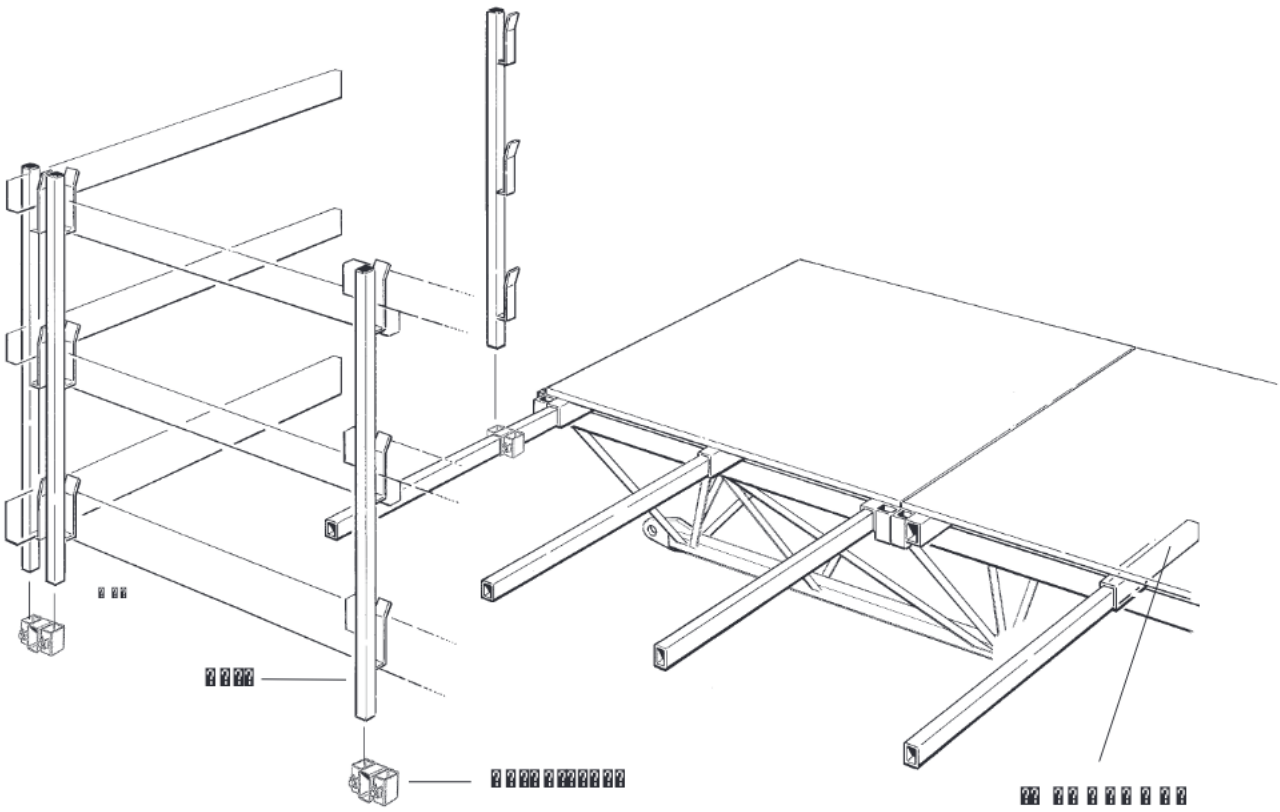
[illegible]

[illegible]



[illegible]

[illegible]



[illegible]

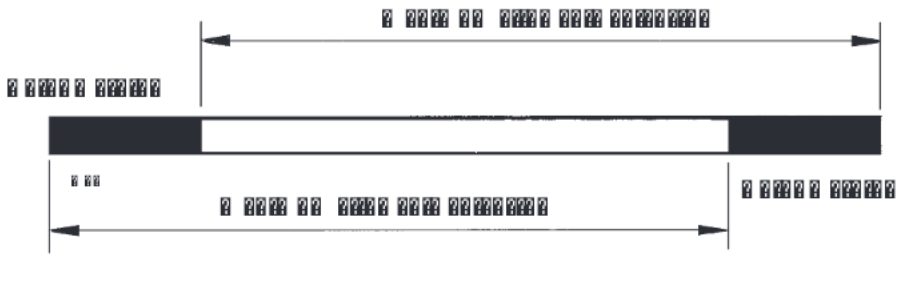
[illegible]

[illegible]

[illegible]

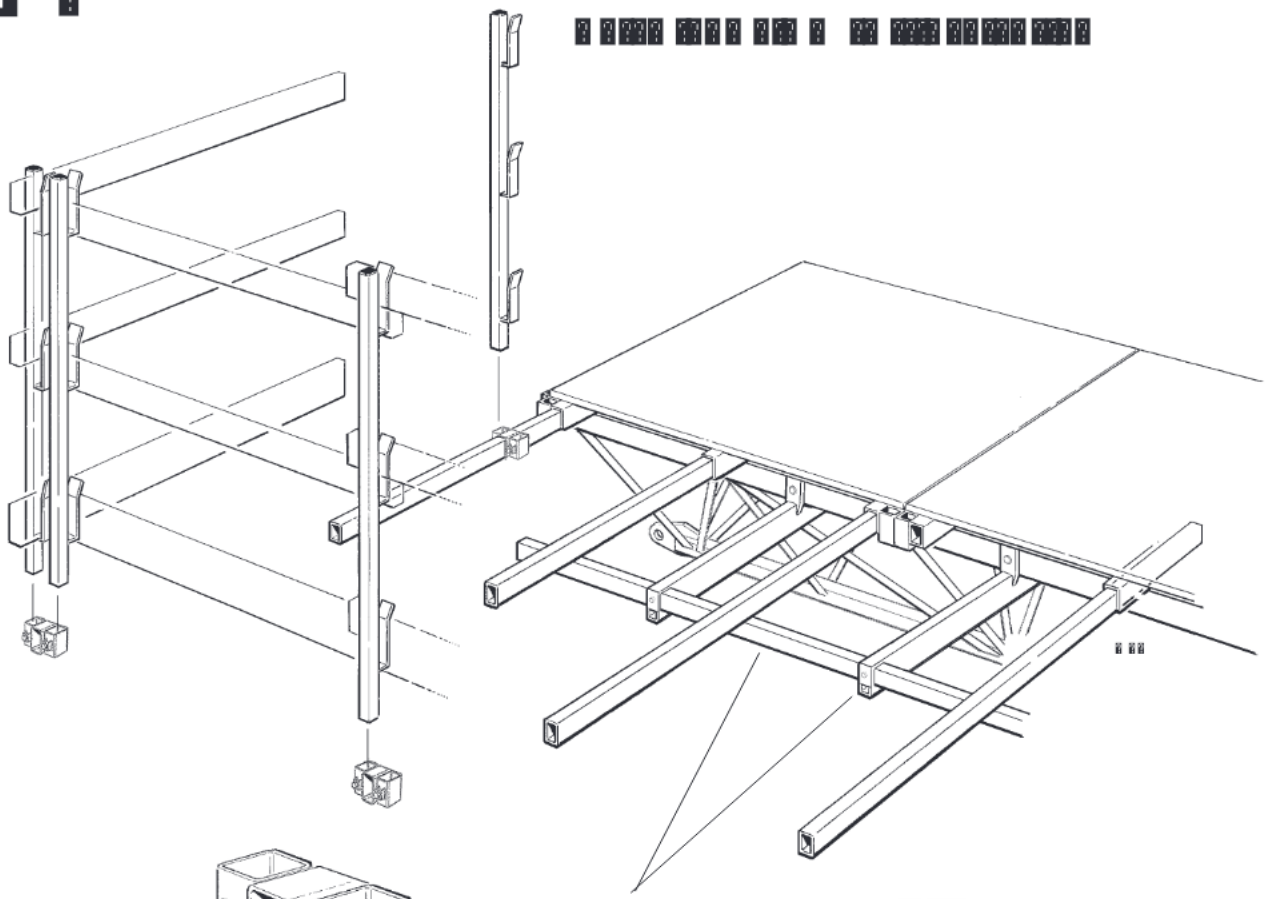
[illegible]

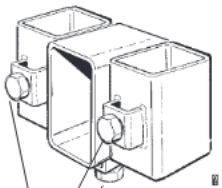
[illegible]

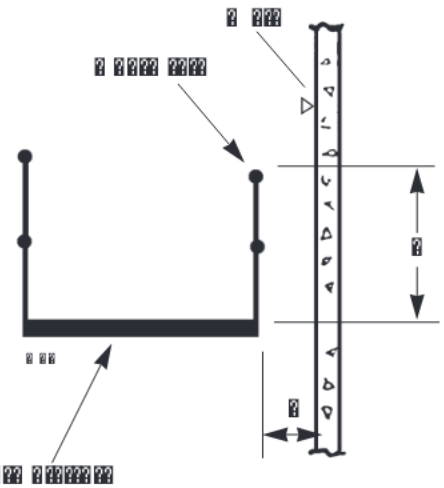


[illegible]

cranelistings.com





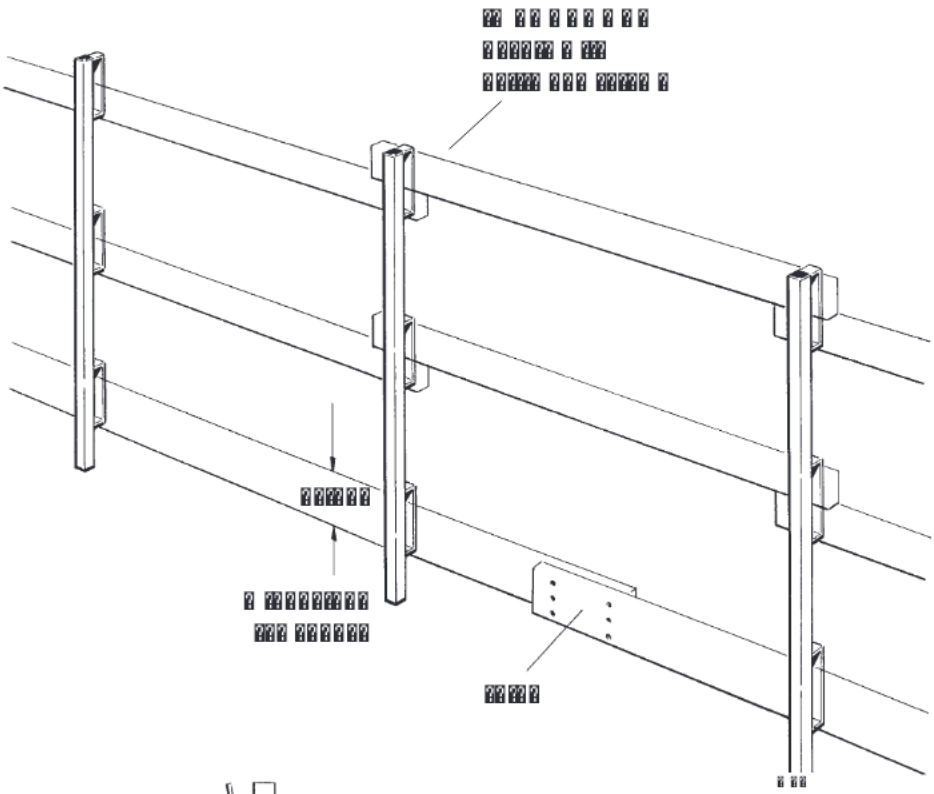


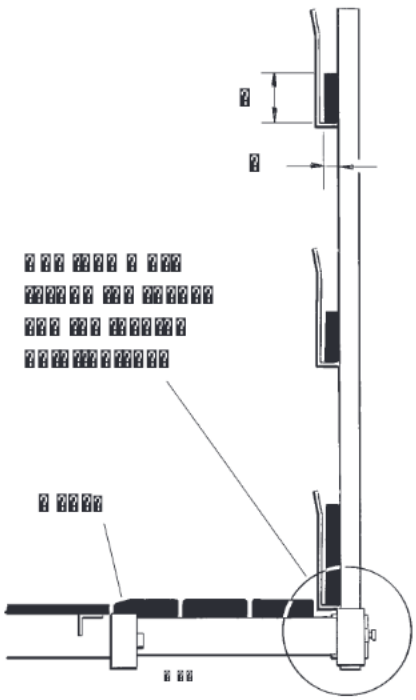
[illegible]

[illegible]

[illegible]

[illegible]





[illegible]

[illegible]	[illegible]
[illegible]	[illegible]
[illegible]	[illegible]
[illegible]	[illegible]
[illegible]	[illegible]

[illegible]

[illegible]	[illegible]	[illegible]	[illegible]	[illegible]
[illegible]	[illegible]	[illegible]	[illegible]	[illegible]
[illegible]	[illegible]	[illegible]	[illegible]	[illegible]

[illegible]

cranelistings.com

? ??????? ??? ???

?? ?? ??????? ?????? ?????? ??????? ?????????

??? ??????? ????? ?? ? ?????? ???? ??? ?? ??? ?? ? ??????? ?? ??? ????? ????? ? ??? ??????? ??? ???? ?? ?????? ?? ??? ??????? ???? ??? ?????? ??????? ?? ??? ????? ??? ? ??? ??????? ????? ?? ??? ???? ?? ?????????????? ?? ??? ???? ???????

? ??? ???? ??? ? ???? ?? ????? ???? ???? ?? ??? ??????? ????? ??? ???? ?? ????? ?????????? ? ? ??? ?????? ??? ? ???? ?? ????? ???? ???? ?? ??? ??????? ?

? ????? ? ??? ?????????? ????? ?????? ??? ???? ?????? ?? ??????? ????????????? ????????????? ????????? ?

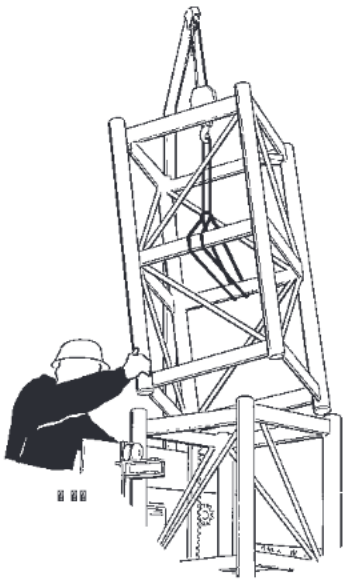


? ??

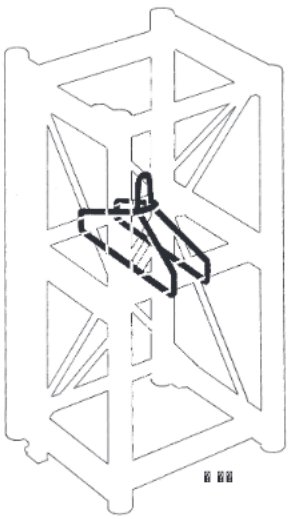
? ??????? ???????

? ??? ??????? ?? ? ?????? ??? ??? ????? ?????? ??????? ??????? ?? ????? ????? ??????? ?? ????????? ???????? ?? ?????? ????????? ? ??? ?????? ?????? ?????? ??????? ?

??? ??? ??? ? ??? ??????? ? ??? ??? ??????? ????? ??? ?????? ??? ??????? ??????? ??? ??? ??? ??? ?? ??? ??????? ??? ?? ??? ??????? ??? ??? ??? ?? ???? ??????? ??? ??? ? ??? ??? ??? ?? ??? ??????????? ?? ???? ????????? ?? ?? ???? ???? ????



? ?? ??? ???? ?? ????????



? ??

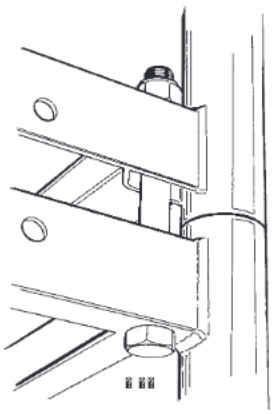
??? ???? ??? ??????? ?? ?? ??????? ??????? ?? ??? ???? ??????? ??? ??? ? ??? ??????????? ????? ??? ??????? ?????? ??? ?? ??????? ????????? ? ???????? ?? ???? ? ??????

cranelistings.com

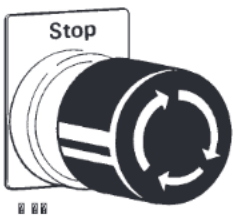
[illegible]

[illegible]

[illegible]






Stop

- ▒▒ ▒▒▒▒▒▒ ▒▒▒ ▒▒▒▒▒▒ ▒▒▒▒ ▒▒ ▒▒▒ ▒▒ ▒▒▒▒ ▒▒▒▒▒ ▒▒▒ ▒▒ ▒▒▒ ▒ ▒▒ ▒▒▒ ▒▒▒▒▒▒▒▒▒▒ ▒▒▒▒▒▒ ▒▒▒▒▒▒ ▒▒ ▒▒▒ ▒▒▒ ▒ ▒▒▒▒▒▒▒▒▒▒
- ▒▒ ▒▒▒▒▒▒▒▒▒▒ ▒▒ ▒▒▒ ▒▒▒ ▒ ▒▒▒▒▒▒▒▒▒▒ ▒▒▒▒▒▒▒
- ▒▒ ▒ ▒▒▒ ▒ ▒▒▒▒▒▒▒▒▒ ▒▒▒▒▒ ▒▒ ▒▒▒ ▒▒▒▒▒ ▒▒ ▒▒▒ ▒▒ ▒▒ ▒▒▒▒ ▒▒ ▒▒▒▒▒▒▒ ▒▒▒▒ ▒▒▒ ▒▒▒ ▒▒▒▒▒ ▒▒▒▒▒▒▒ ▒▒ ▒▒▒ ▒▒▒ ▒ ▒▒▒▒▒▒▒▒▒▒▒
- ▒▒ ▒ ▒▒▒▒▒▒▒▒ ▒▒▒ ▒ ▒▒▒ ▒▒▒▒▒ ▒▒ ▒▒▒ ▒ ▒▒ ▒▒▒ ▒▒ ▒ ▒▒▒▒▒▒▒▒▒▒ ▒▒▒▒▒▒ ▒▒▒ ▒ ▒ ▒▒▒▒ ▒▒▒▒ ▒▒▒▒

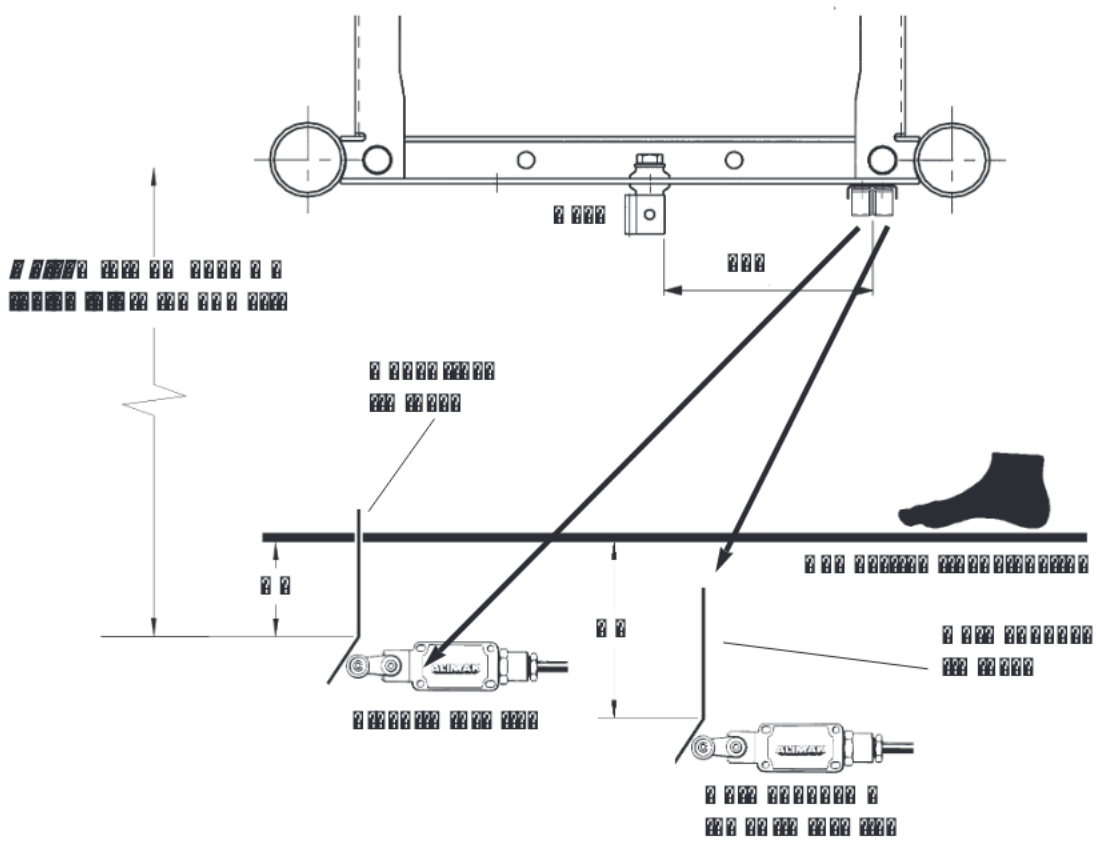
▒▒▒ ▒▒▒▒▒▒▒▒▒ ▒ ▒▒▒▒▒▒▒▒▒▒▒▒▒▒ ▒▒▒▒▒▒▒▒ ▒▒ ▒▒▒ ▒▒▒▒▒ ▒▒▒▒▒▒▒▒

▒ ▒▒▒▒▒ ▒▒▒▒▒ ▒▒▒▒▒▒ ▒▒▒▒▒▒▒▒ ▒▒▒▒▒ ▒

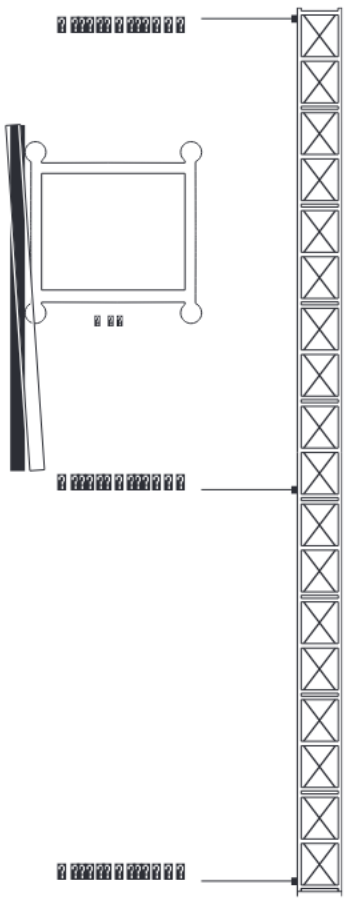
▒ ▒▒▒▒▒▒▒ ▒▒▒▒▒ ▒ ▒▒▒▒▒▒▒▒▒

▒ ▒▒▒▒▒▒	▒▒	▒▒
▒ ▒▒▒ ▒▒▒▒▒▒▒▒ ▒ ▒▒▒▒▒▒▒ ▒ ▒ ▒▒▒▒▒▒▒	▒ ▒▒▒▒ ▒ ▒ ▒▒ ▒▒▒▒ ▒▒▒	▒ ▒▒▒▒ ▒ ▒ ▒▒ ▒▒▒▒ ▒▒▒

▒▒▒ ▒ ▒▒▒▒▒ ▒▒▒▒▒▒▒ ▒▒▒▒▒▒▒▒▒▒▒▒▒▒▒



cranelistings.com



[illegible]

[illegible]

[illegible]

[illegible]

[illegible]

[illegible]

[illegible]

[illegible]

cranelistings.com

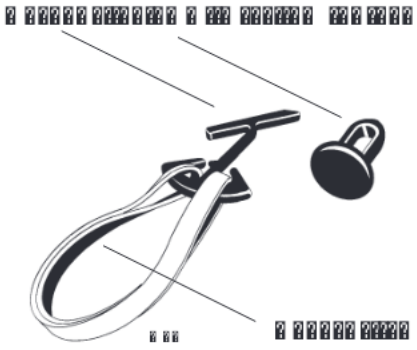
▪ ▪▪▪▪▪▪▪ ▪▪▪▪▪▪ ▪▪▪▪▪▪▪▪▪▪

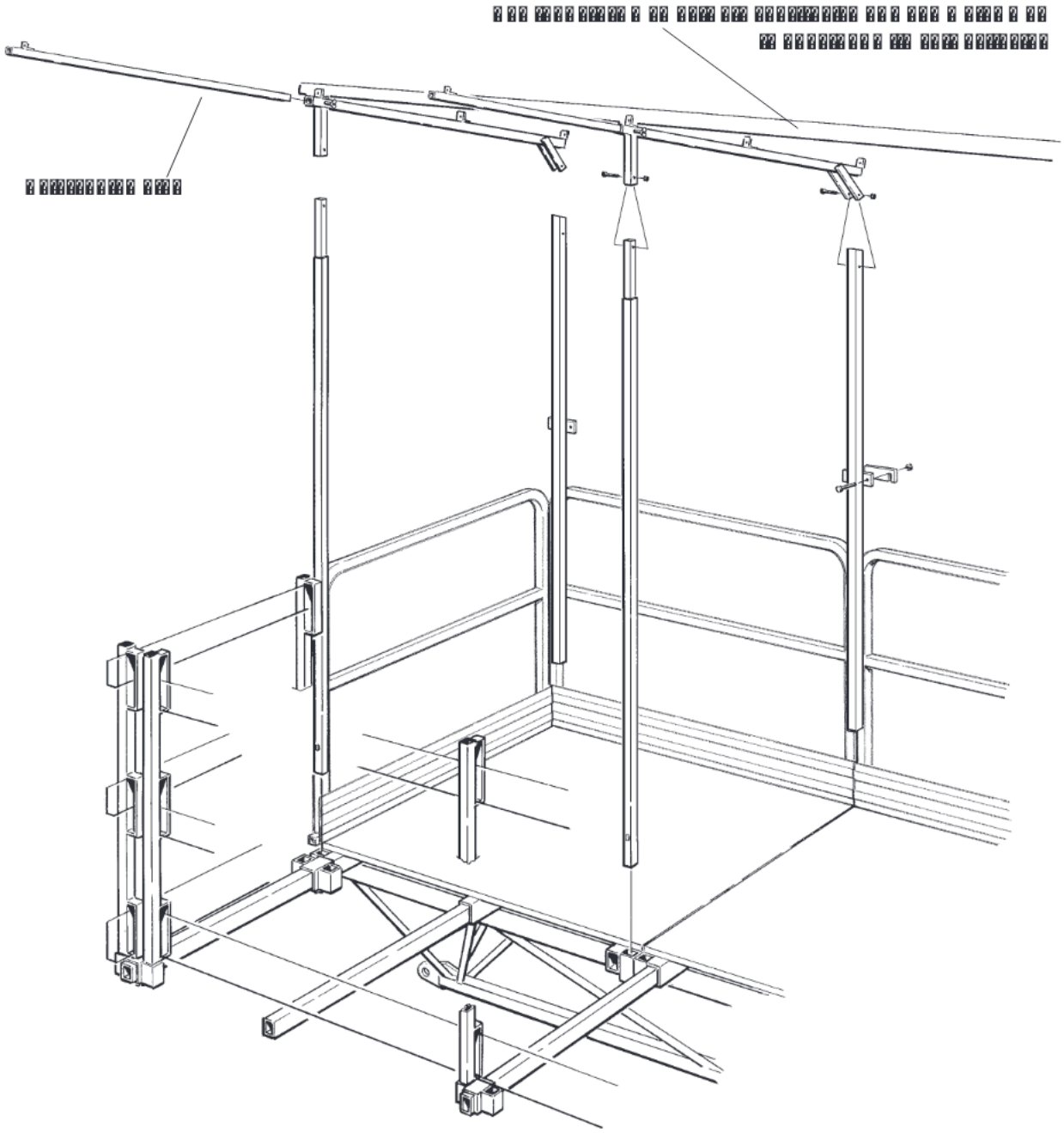
▪ ▪▪▪ ▪ ▪▪▪▪▪▪ ▪▪▪▪▪▪▪▪▪▪ ▪▪▪▪ ▪ ▪▪ ▪▪▪▪▪▪ ▪▪▪▪ ▪▪ ▪▪▪▪▪▪▪▪▪▪▪▪ ▪ ▪▪▪ ▪▪▪ ▪▪▪▪▪▪ ▪▪▪▪▪ ▪▪▪ ▪▪▪▪▪▪▪▪ ▪ ▪▪▪ ▪▪▪▪▪▪▪▪▪▪ ▪▪▪▪▪▪▪ ▪▪▪▪▪▪

▪▪▪ ▪▪▪▪▪ ▪▪ ▪▪▪▪▪▪▪▪ ▪ ▪▪▪ ▪▪▪▪▪▪▪ ▪▪▪▪▪▪ ▪▪▪ ▪▪▪▪▪▪▪▪ ▪▪▪▪ ▪▪▪▪▪▪▪▪ ▪▪▪▪▪▪▪▪▪▪ ▪▪▪▪ ▪ ▪▪▪ ▪▪ ▪▪▪▪▪ ▪▪▪ ▪ ▪▪ ▪ ▪▪▪▪▪▪▪▪ ▪▪ ▪ ▪ ▪▪ ▪▪▪▪ ▪▪▪▪▪ ▪▪▪ ▪▪▪▪▪▪▪ ▪▪▪▪ ▪▪ ▪▪▪ ▪▪▪▪▪ ▪▪▪ ▪ ▪▪▪▪▪▪▪ ▪▪▪ ▪▪▪▪▪ ▪▪▪ ▪▪▪▪▪ ▪▪▪ ▪ ▪▪▪▪▪▪

▪ ▪▪▪ ▪ ▪▪ ▪▪▪ ▪▪▪▪▪▪▪ ▪▪▪▪▪ ▪▪ ▪▪▪▪▪▪▪▪ ▪▪▪▪▪▪▪▪▪ ▪▪▪ ▪ ▪▪▪ ▪▪▪▪▪▪ ▪ ▪▪▪▪▪ ▪▪▪▪▪▪▪▪▪

▪▪▪ ▪▪▪▪▪▪▪▪ ▪▪ ▪▪▪ ▪▪▪ ▪▪▪▪▪▪▪▪▪ ▪▪▪▪▪ ▪▪ ▪▪▪▪▪▪▪▪▪ ▪ ▪▪▪ ▪▪▪▪▪ ▪▪▪▪▪▪▪▪ ▪▪▪▪▪ ▪▪▪▪▪





cranelistings.com

[illegible]

[illegible]

[illegible]

[illegible]

[illegible]

[illegible]

cranelistings.com

[illegible] ..... [illegible]
[illegible] ..... [illegible]
[illegible] ..... [illegible]

cranelistings.com

? ???.????

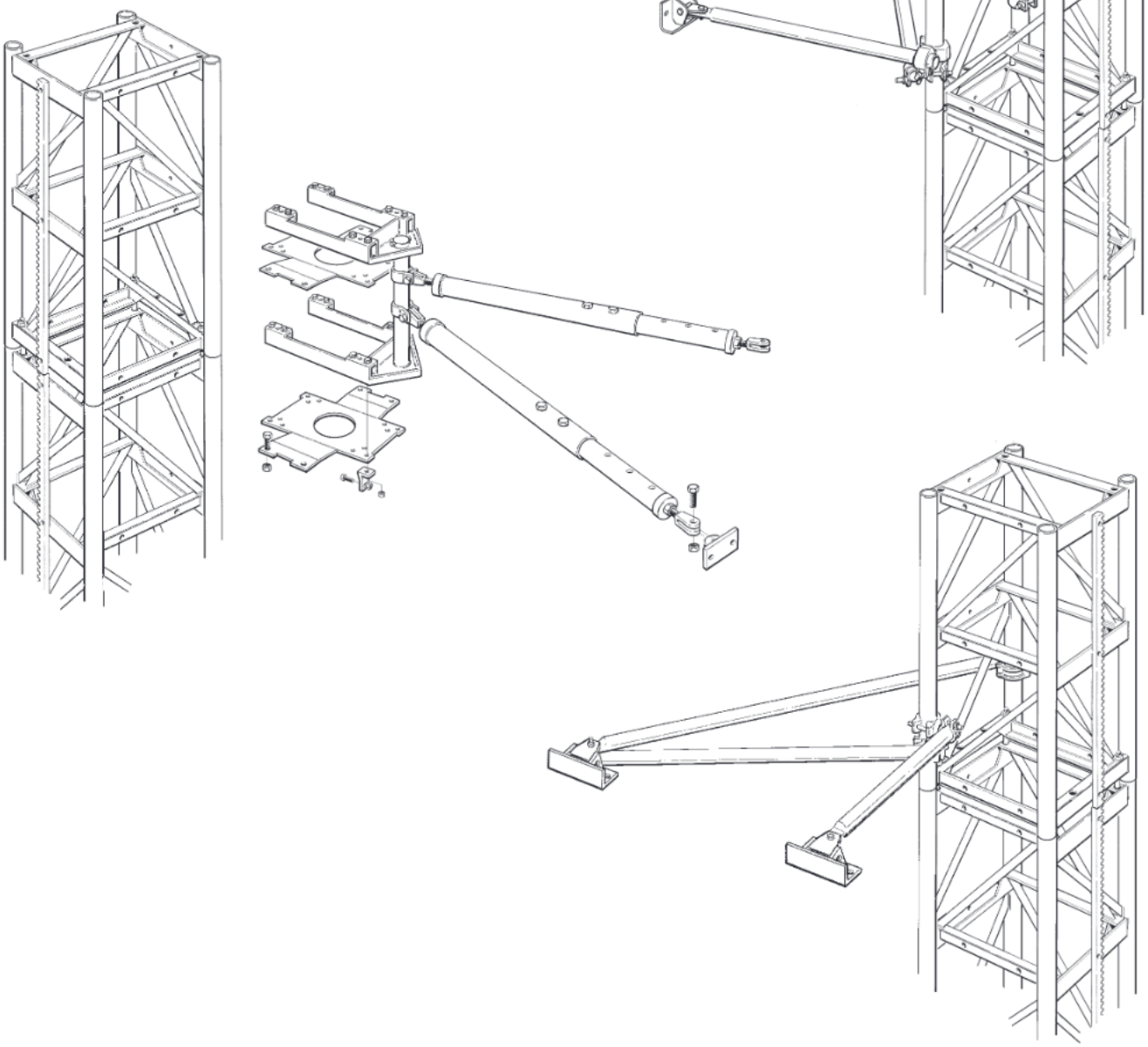
?????? ?? ??? ? ????.?? ??????????????? ??? ???????? ? ???.????????.?? ??? ???????? ?? ?????????. ? ??? ? ?????. ?????????.?????????.????? ?? ??????????. ???????. ??? ? ???.? ???.?? ?? ????. ?? ??????????? ? ??? ??????????????? ??????. ???????.???. ?????. ??????????? ???. ????????.??? ????? ?? ??? ? ??????. ???????. ?? ????????. ??????????.??.????????????

? ???. ?????. ? ???.????. ???. ? ???.? ???.? ?? ???.? ?? ???????. ??? ?????????.??

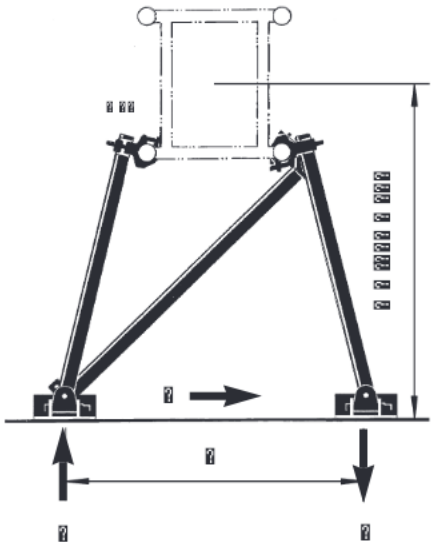
? ?????. ????. ???. ??. ??. ?????????. ??. ?????.??. ?????. ??????????.????. ? ???. ????. ?????. ?????. ???????. ??. ???????. ???. ????????. ??. ?????. ???. ????.??? ?????????. ????????????.??????.? ???????. ???????. ???????. ??. ???. ?????????. ? ???. ????????.????.??????. ???????

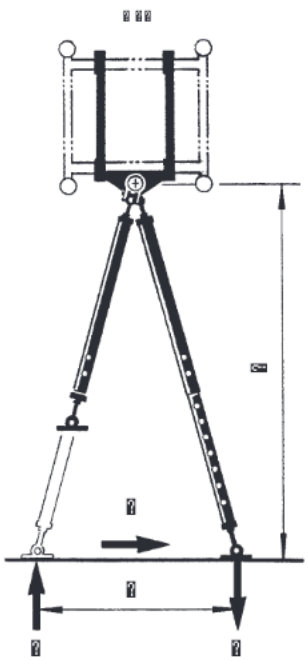
? ? ?????.???. ?. ?????????.????. ???. ????????. ?????.???. ?????.????.??? ???. ?????.?????. ???. ?????.???. ??. ????????

? ???.? ???. ??. ?????.???.?. ?????. ????. ??. ???. ??. ??. ?????????



cranelistings.com





[illegible]

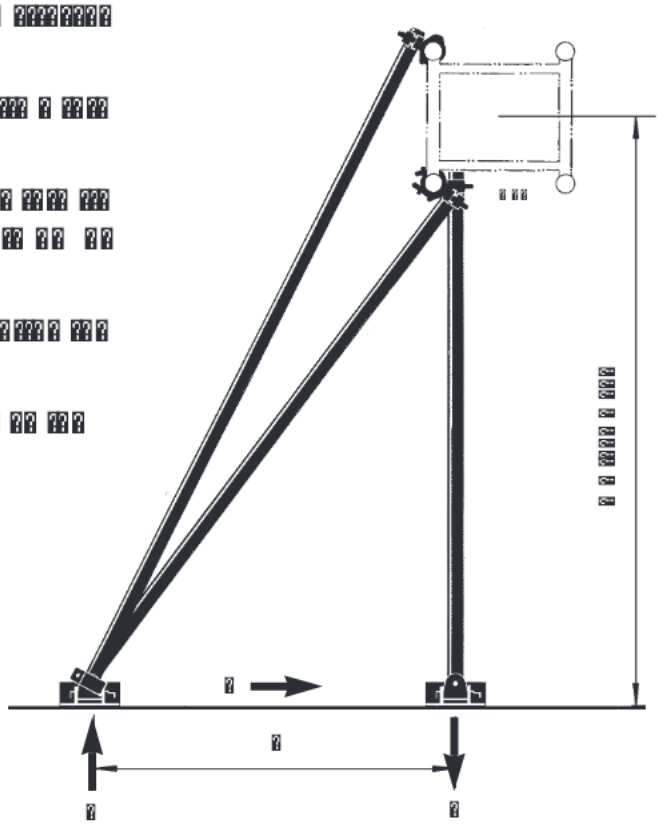
[illegible]

[illegible]

[illegible]

[illegible]

[illegible]

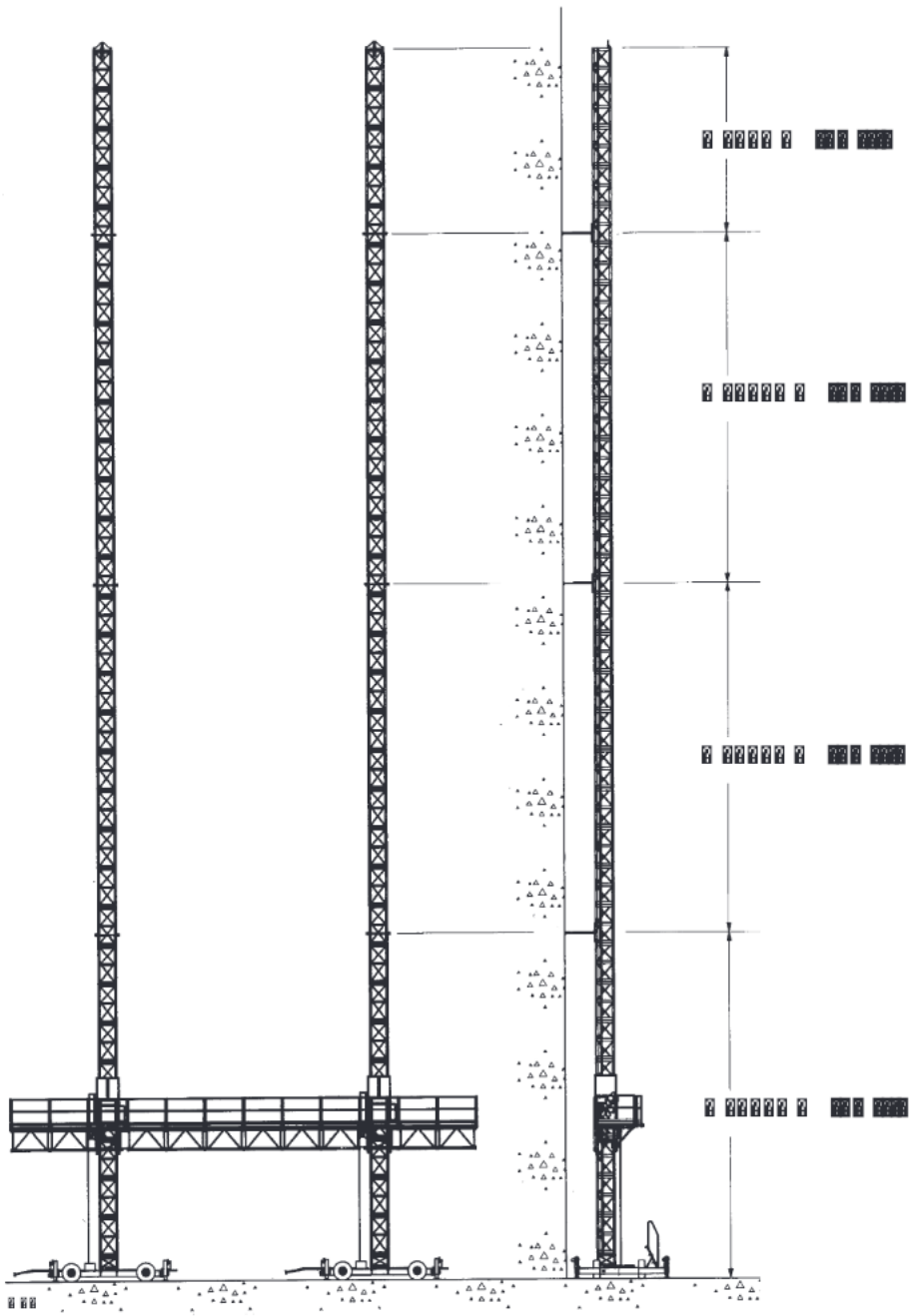


[illegible]	[illegible]	[illegible]
[illegible]	[illegible]	[illegible]
[illegible]	[illegible]	[illegible]
[illegible]	[illegible]	[illegible]
[illegible]	[illegible]	[illegible]
[illegible]	[illegible]	[illegible]
[illegible]	[illegible]	[illegible]
[illegible]	[illegible]	[illegible]

cranelistings.com

[illegible]

[illegible]



[illegible]

cranelistings.com

[illegible]

[illegible]

[illegible]

[illegible]

[illegible]

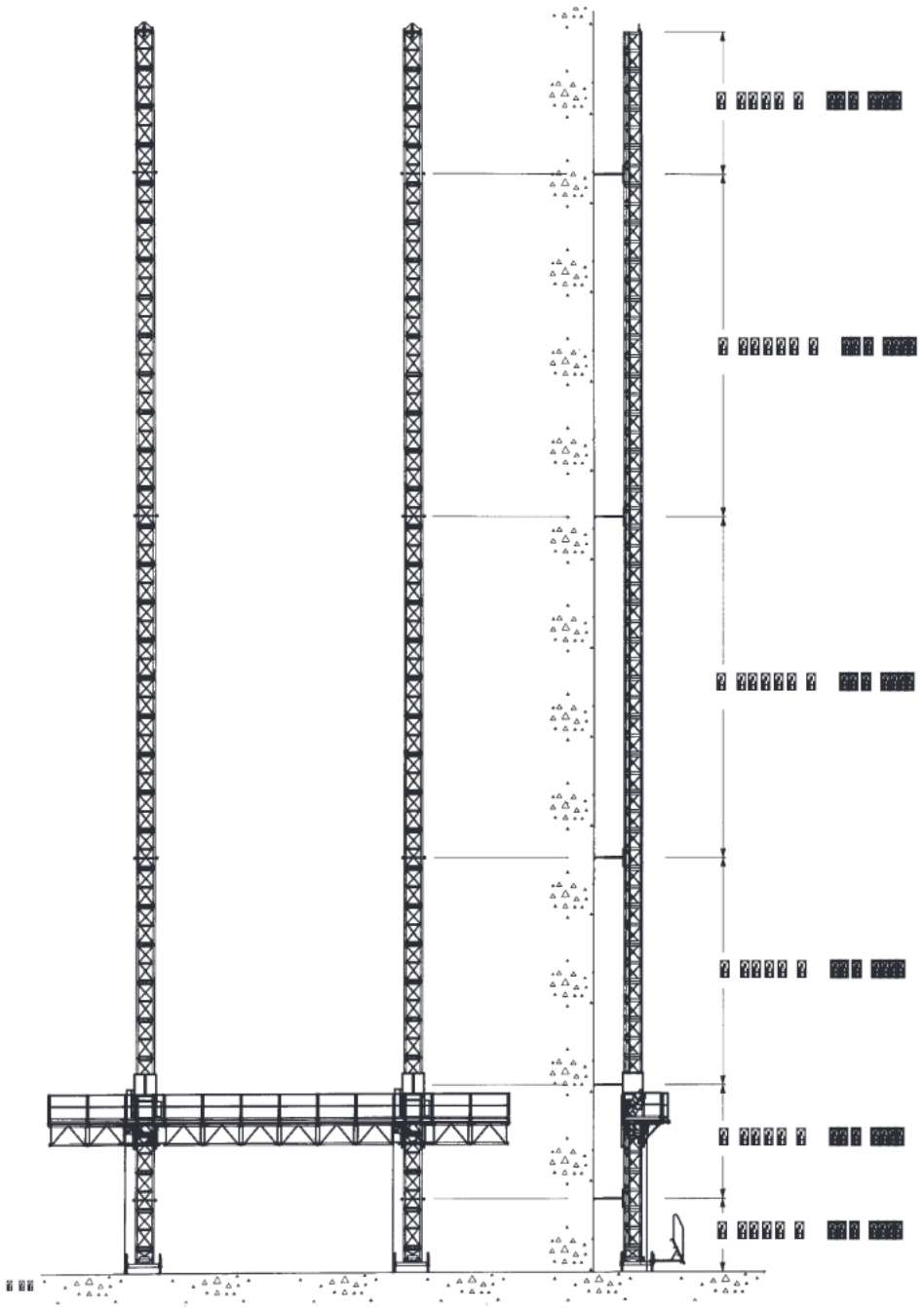
[illegible]

[illegible]

[illegible]

[illegible]

[illegible]



[illegible]

cranelistings.com

[illegible]

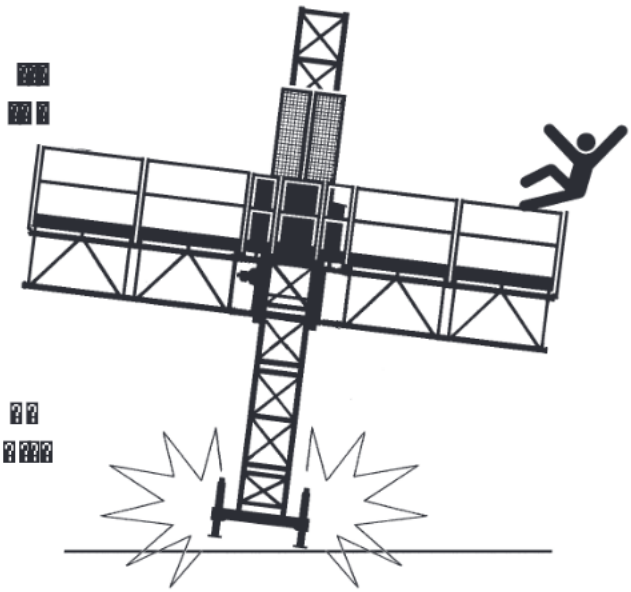
cranelistings.com

?????? ??? ??? ??????? ????

*? ????? ?? ?????? ????? ?? ?? ??? ??? ??? ? ????? ??
? ??? ?? ?????? ????? ???? ??? ????? ? ?? ???? ??? ?
?? ?????? ????? ??? ? ? ???? ???*

? ????? ?????

? ??? ????????? ??? ???? ??????? ??? ???? ??? ????????? ? ??? ???
?? ???????? ??? ??? ???????? ???? ?? ????? ? ?? ?????
? ??? ???? ? ??? ??? ? ??? ?? ???? ? ??? ??? ? ??? ?
??? ??? ???? ?? ??? ???????? ?? ?????? ????????? ?? ????? ????
?????? ????



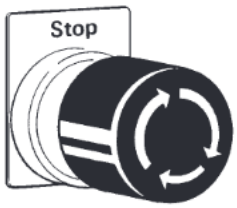
? ? ? ? ?? ? ? ????? ?????? ?? ??? ??? ????? ??? ? ??
?????? ?? ??????? ???? ??? ??????? ?? ???
????????? ??? ?? ????????? ??????
? ????????? ????? ?????????? ????????

? ????? ? ?

? ????? ?????? ? ??? ???? ????????

? ?? ??? ???? ???? ???? ??? ??????? ?? ??? ??? ?????? ????
?????????? ?????? ?? ??? ? ??? ???? ?????? ????
?????????? ??? ??? ????????? ???????

? ??????? ??????? ?????? ??????



? ????? ? ?

? ????????? ??????

? ?? ??? ???????? ??? ??? ??? ? ???????? ?????????????? ??
???????? ?????????????? ? ?????? ? ???? ? ??? ?? ????????
?????? ??? ? ????

? ?? ?????? ??????? ???????????????? ??????????

? ???? ??? ??????? ?? ????????? ?? ?????

cranelistings.com

[illegible]

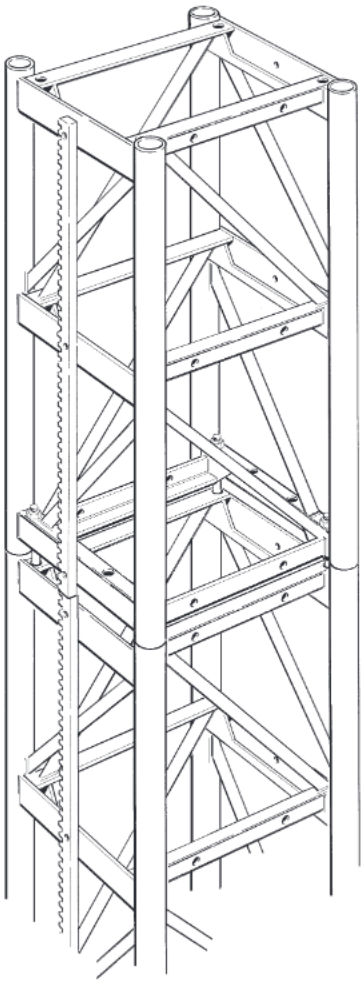
[illegible]

[illegible]

[illegible]

[illegible]

[illegible]

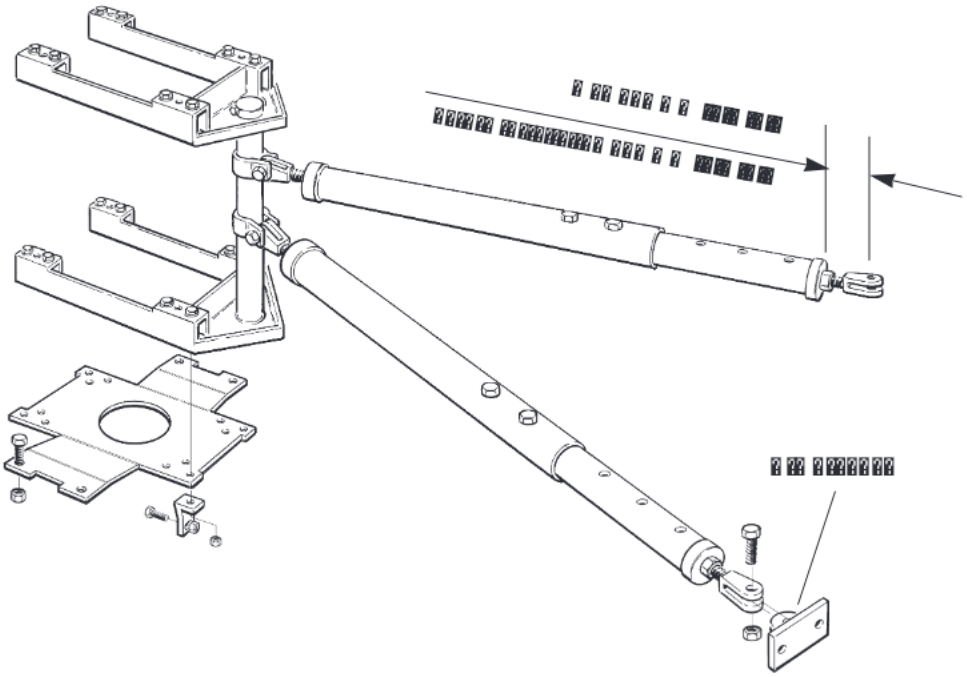


[illegible]

[illegible]

[illegible]

[illegible]



[illegible]

[illegible]

[illegible]

[illegible]

cranelistings.com



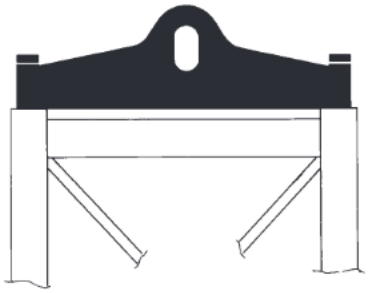
cranelistings.com

[illegible]

[illegible] [illegible] [illegible] [



cranelistings.com

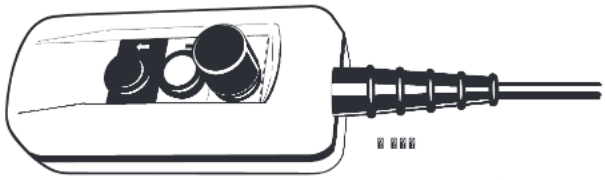


[illegible]

[illegible]

[illegible]

[illegible]



[illegible]



[illegible]

[illegible]

[illegible]

cranelistings.com

[illegible]

[illegible] [illegible] [illegible] [

ALIMAK

[illegible]

[illegible]

[illegible]

- [illegible] ☐
  - [illegible] ☐
  - [illegible] ☐
  - [illegible] ☐
  - [illegible] ☐
  - [illegible] ☐
  - [illegible] ☐
- [illegible] ☐
- [illegible] ☐
- [illegible]
  - [illegible] ☐
  - [illegible] ☐
  - [illegible] ☐
  - [illegible] ☐
  - [illegible] ☐
  - [illegible] ☐
  - [illegible] ☐
- [illegible] ☐
- [illegible] ☐
- [illegible] ☐
- [illegible]
  - [illegible] ☐
  - [illegible] ☐
  - [illegible] ☐
  - [illegible] ☐
  - [illegible] ☐
  - [illegible] ☐
- [illegible] ☐

[illegible]

- [illegible] ☐
  - [illegible] ☐
  - [illegible] ☐
  - [illegible] ☐
- [illegible] ☐
- [illegible] ☐
- [illegible] ☐

cranelistings.com